1. Schematic Page Description :

ZHQ/Hugo Schematic Ver : 1.0

I2C table

Function	Channel	Read	Write
Touch pad	I2C0	0x67	
Audio codec	I2C1	0x21	0x20
Light sensor	I2C4		

SMBus table

Function	Channel	Address
Battery	SMB0	
Thermal	SMB2	0x4C

Function	Channel
PP3300_DSW	0x42
PP5000	0x41
PP1350	0x49
PP1050_PCH	0x43
PP1000_PCH	0x47

ZHQ/Hugo

Intel Bay Trail-M Platform Block Diagram

SKUA DC N2820
AJSR1SGUT03 --CPU(1170P)N2820 2.13G SR1SG(FCBGA)STNBSQ

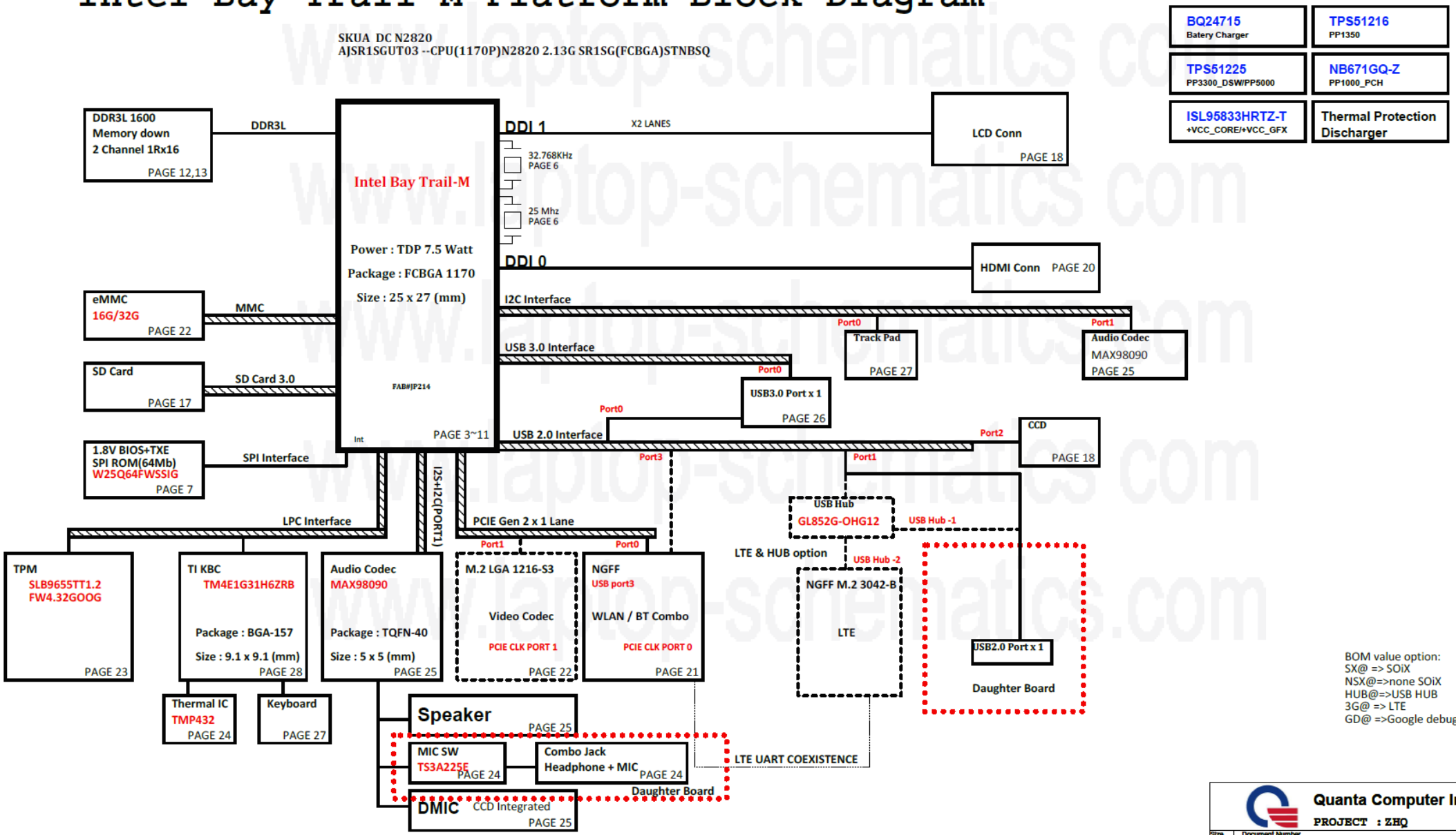

BOM value option:
SX@ => SOiX
NSX@=>none SOiX
HUB@=>USB HUB
3G@ => LTE
GD@ =>Google debug

Quanta Computer Inc.
PROJECT : ZHQ

Size	Document Number	Rev
	Block Diagram	1A

Date: Thursday, July 03, 2014 Sheet 2 of 42

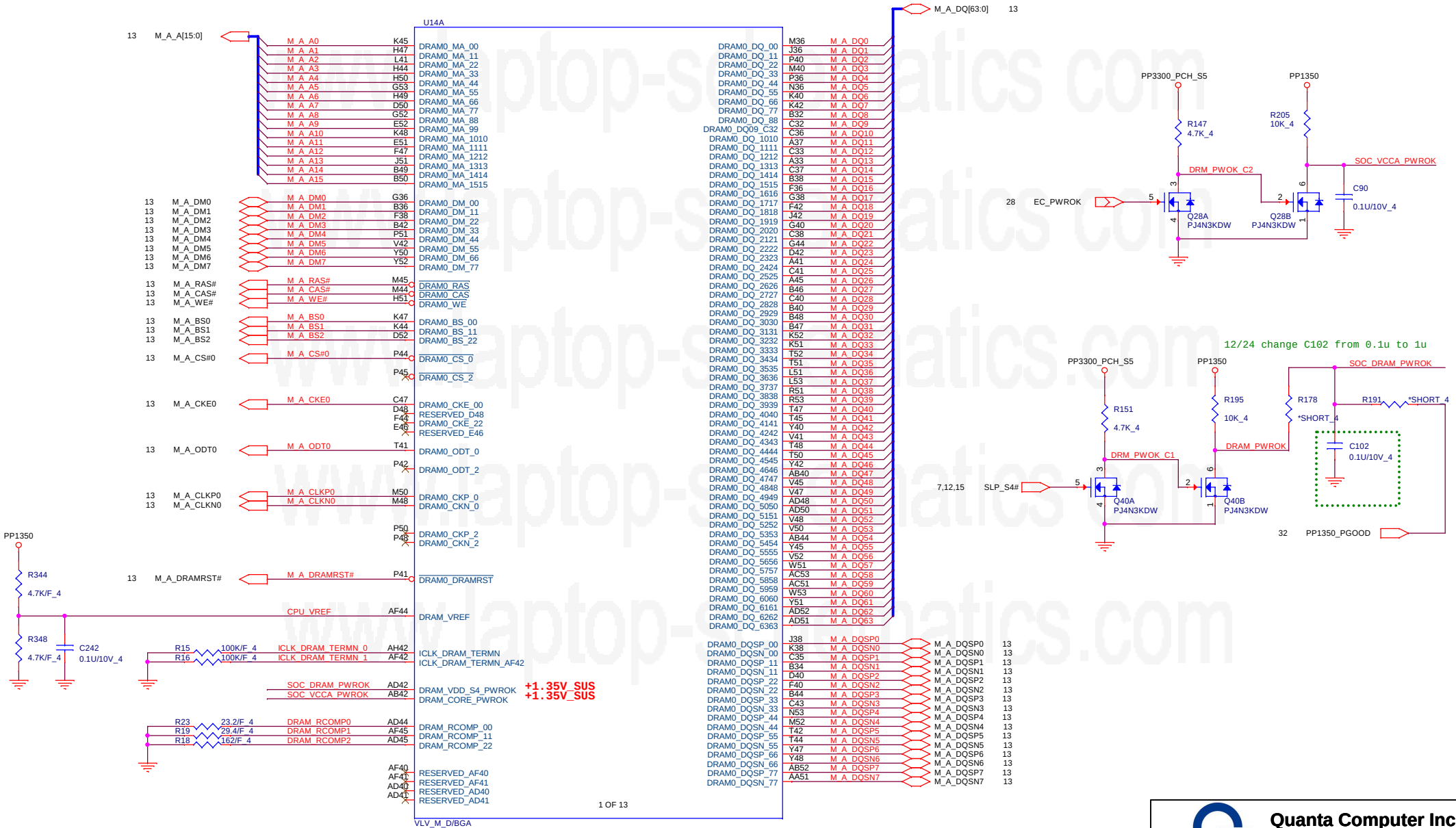

Quanta Computer Inc.

PROJECT : ZHQ

Size	Document Number	Rev
	Valley 1/9 (DDRA)	1A

Date: Thursday, July 03, 2014 Sheet 3 of 42

Quanta Computer Inc.

PROJECT : ZHQ

Size	Document Number	Rev
	Valley 2/9 (DDRB)	1A

Date: Thursday, July 03, 2014 Sheet 4 of 42

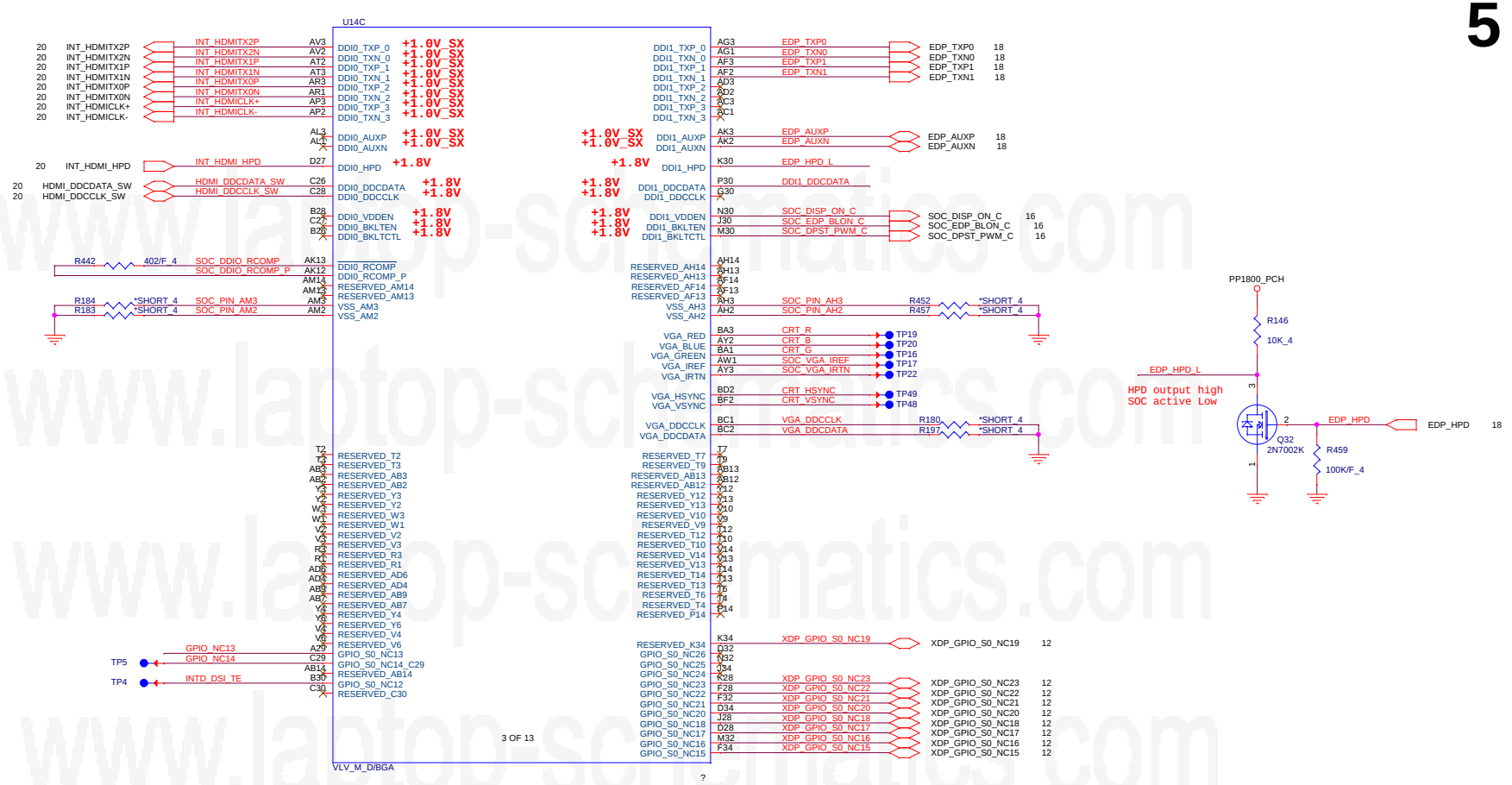

BTM Strapping Table

Pin Name	Strap description	Sampled	Configuration	Note
GPIO_SO_SC_56	Top Swap (A16 Override)	PWROK	0 = Top address bit is unchanged **1 = Top address bit is inverted**	using SoC internal PU
LPE_I2S2_FRM	BIOS Boot Selection	PWROK	0 = LPC **1 = SPI**	using SoC internal PU
GPIO_SO_SC_65	Security Flash Descriptors	PWROK	0 = Override **1 = Normal operation**	
DDI0_DDCDATA	DDI0 Detect	PWROK	0 = DDI0 not detected **1 = DDI0 detected**	Pull up +1.8V at HDMI side
DDI1_DDCDATA	DDI1 Detect	PWROK	0 = DDI0 not detected **1 = DDI0 detected**	using SoC internal PU
GPIO_SO_NC_13				

Quanta Computer Inc.
PROJECT : ZHQ

Size	Document Number	Rev
	Valley 3/9 (Display)	1A

Date: Thursday, July 03, 2014 Sheet 5 of 42

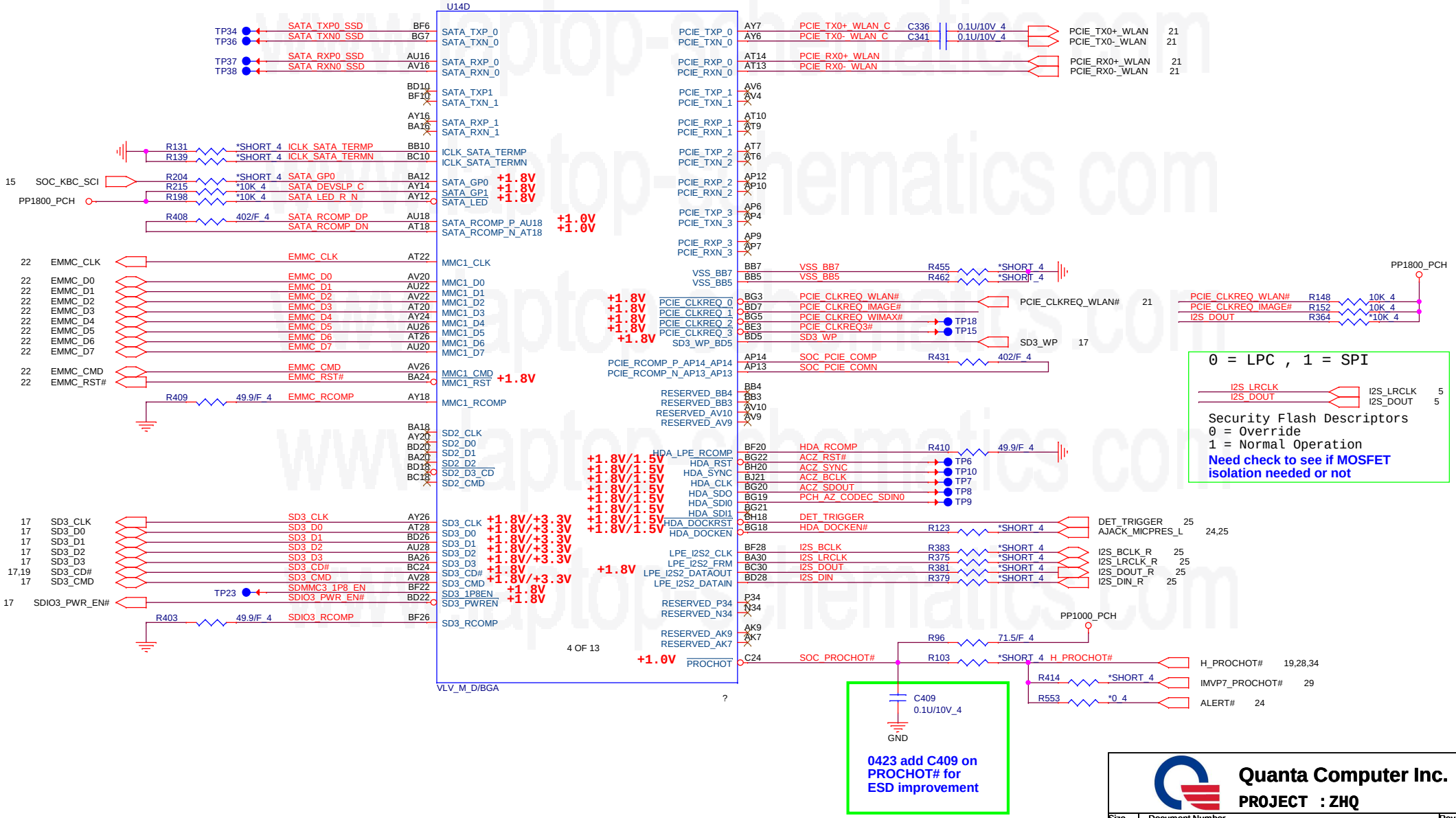

Quanta Computer Inc.

PROJECT : ZHQ

Size	Document Number	Rev
	Valley 4/9 (SD/PCIE/SATA)	1A

Date: Thursday, July 03, 2014 Sheet 6 of 42

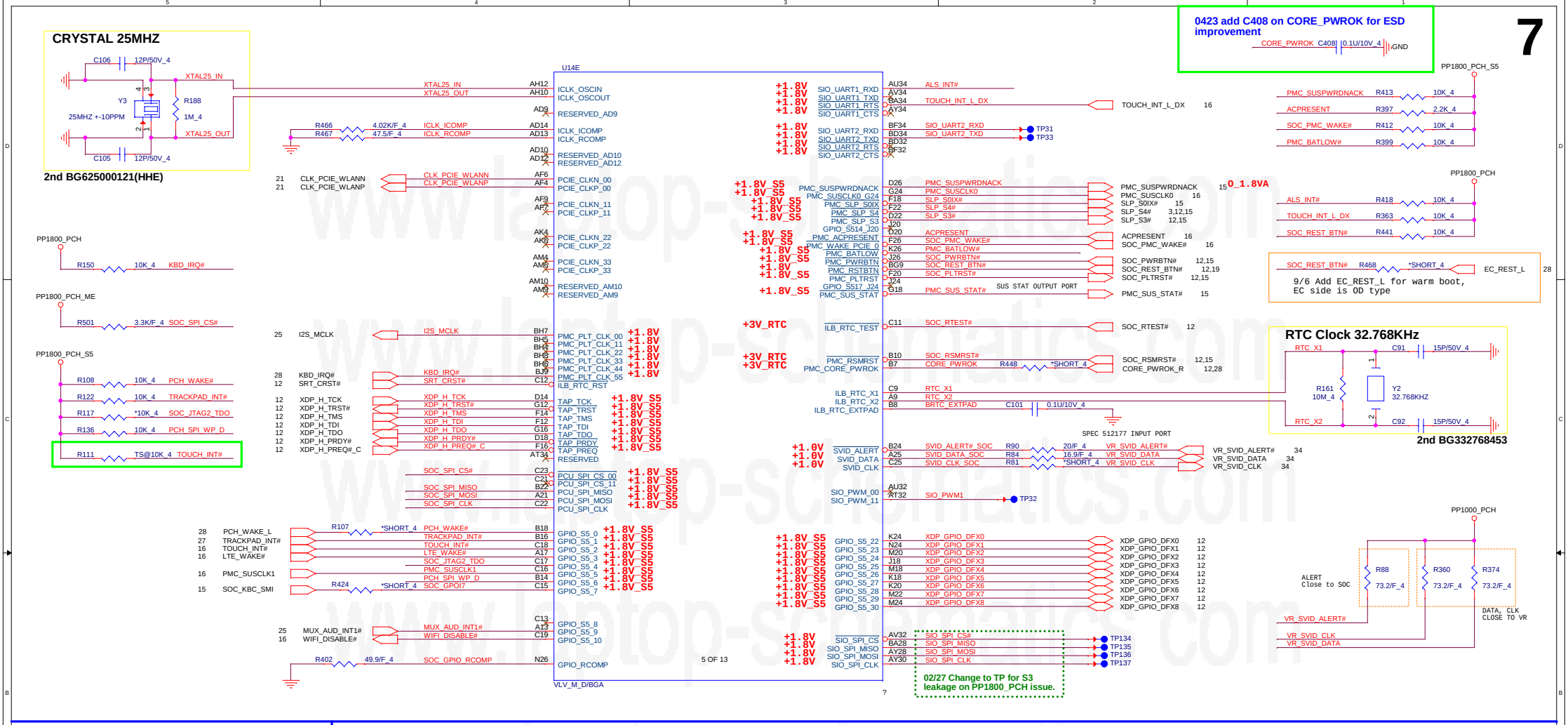

RTC Circuitry(RTC)

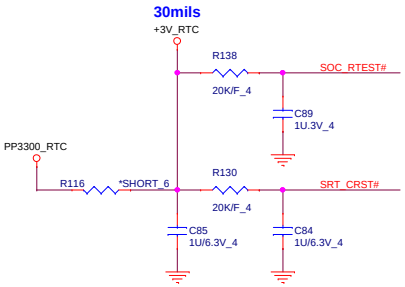

SPI_FLASH

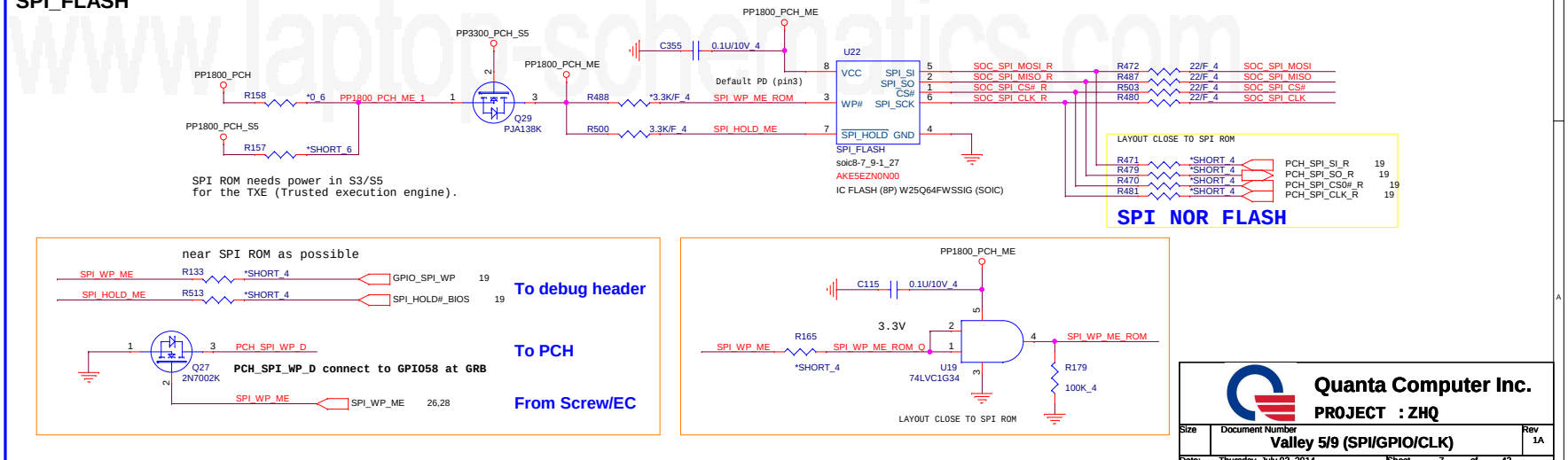

Quanta Computer Inc.

PROJECT : ZHQ

Size	Document Number	Rev
	Valley 5/9 (SPI/GPIO/CLK)	1A

Date: Thursday, July 03, 2014 Sheet 7 of 42

4/22 update the DRMA ID table

Vender	RAM_ID 210	Q P/N	Mfr. PN	Freq.	Size	Pice
Micron	0x000		MT41K256M16HA-125	1600MHz	4GB	8
Hynix	0x001	AKD5JGETW04	H5TC4G63AFR-PBA	1600MHz	4GB	8
Micron	0x010	AKD5DGSTL07	MT41K128M16JT-125M:K	1600MHz	2GB	8
Hynix	0x011	AKD5PGSTW03	H5TC4G63MFR-PBA	1600MHz	2GB	4
Micron	0x100		MT41K256M16HA-125	1600MHz	2GB	4
Hynix	0x101	AKD5JGETW04	H5TC4G63AFR-PBA	1600MHz	2GB	4
Kingston	0x110	AKD5PZSTP02	D2516EC4BXGGB	1600MHz	4GB	8
Hynix	0x111	AKD5PGSTW03	H5TC4G63MFR-PBA	1600MHz	4GB	8

02/14 Change RMID to 001.

0424 reserve R483 for CLKRUN# disable

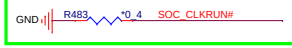

Quanta Computer Inc.
PROJECT : ZHQ

Size	Document Number	Rev
	Valley 6/9 (USB/LPC/I2C)	1A

Date: Thursday, July 03, 2014 Sheet 8 of 42

1031 for layout suggestion by intel,
VSS_AXG_SENSE didn't connect to VSS_SENSE,
will connect the GND via near VCC_AXG_SENSE

1031 for layout, add 0hm between
GND and VSS_AXG_SENSE

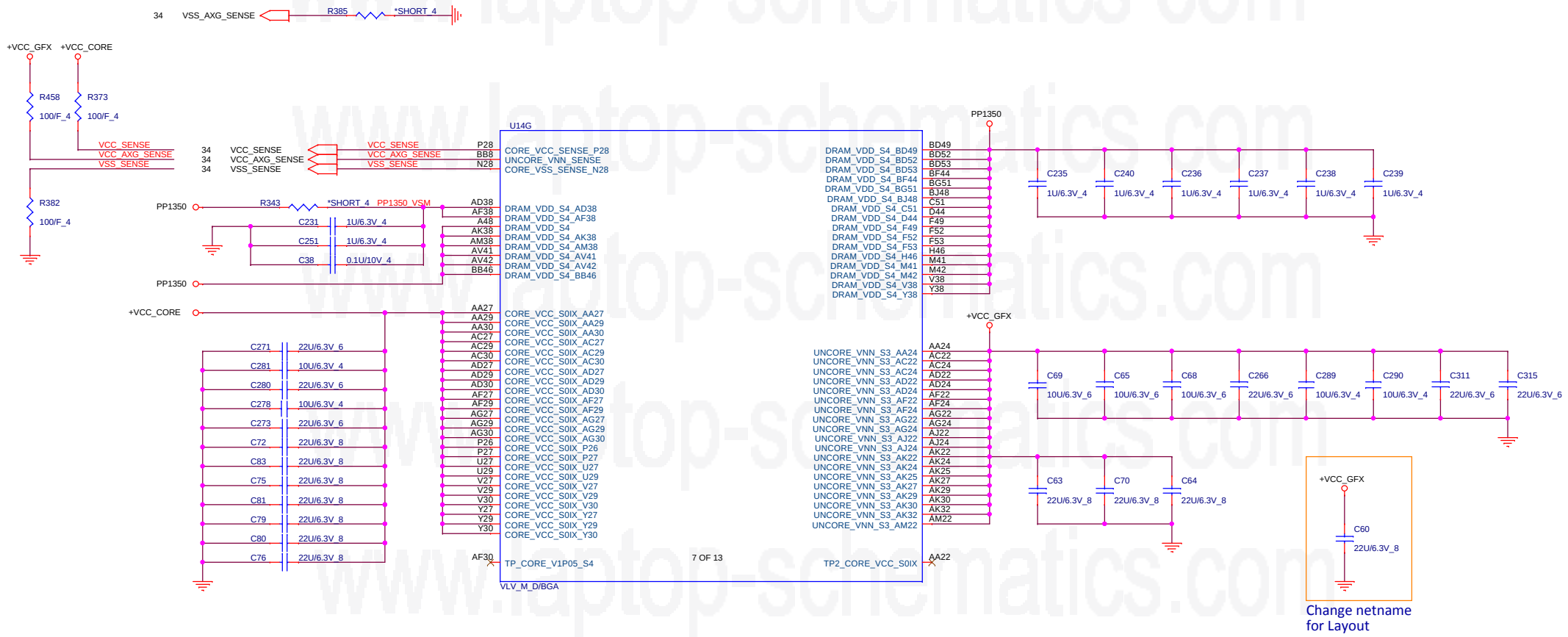

Change netname
for Layout

Quanta Computer Inc.			
PROJECT : ZHQ			
Size	Document Number		Rev
	Valley 7/9 (Power 1)		1A
Date: Thursday, July 03, 2014	Sheet 9 of 42		

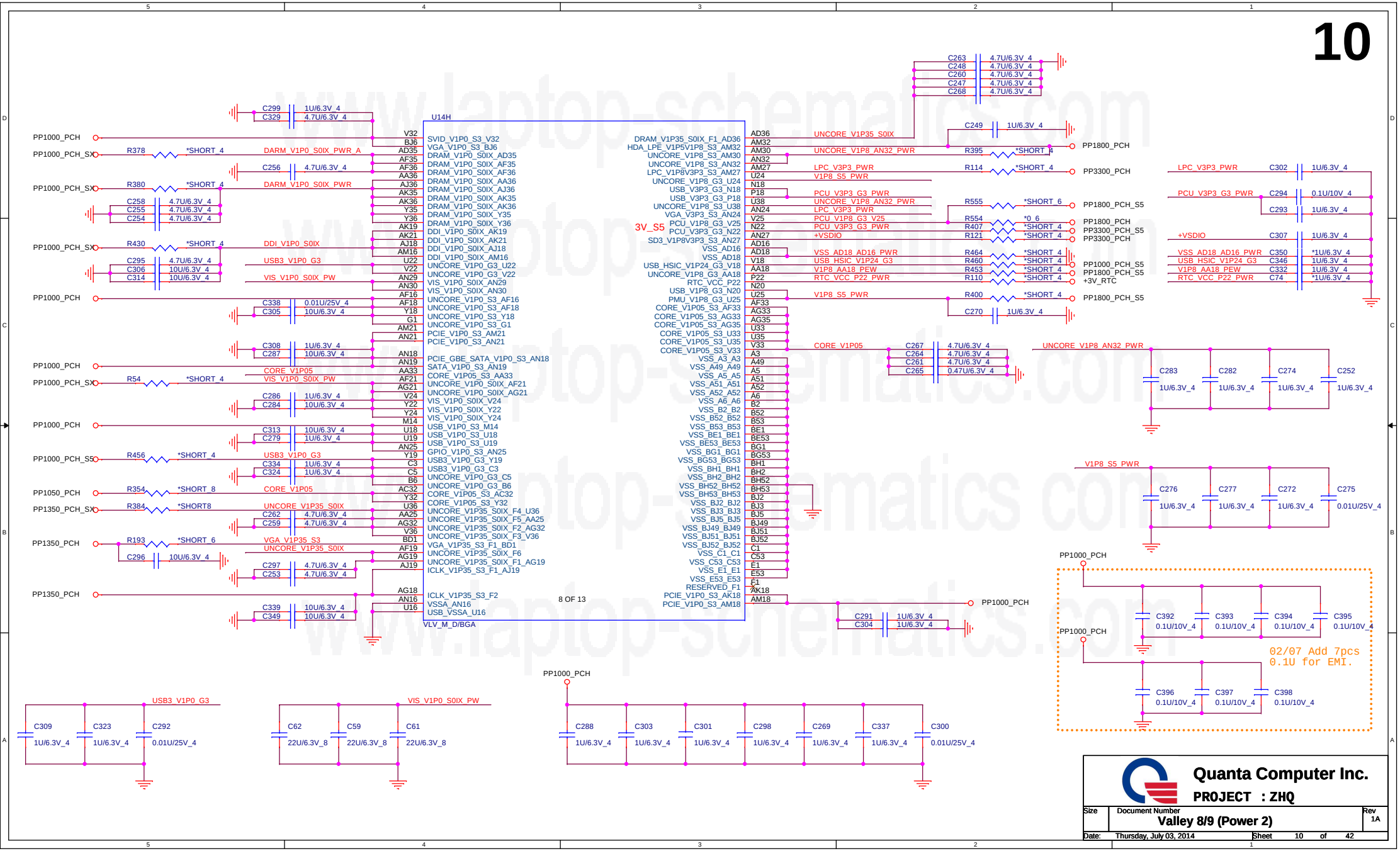

Quanta Computer Inc.

PROJECT : ZHQ

Size	Document Number	Rev
	Valley 8/9 (Power 2)	1A

Date: Thursday, July 03, 2014 Sheet 10 of 42

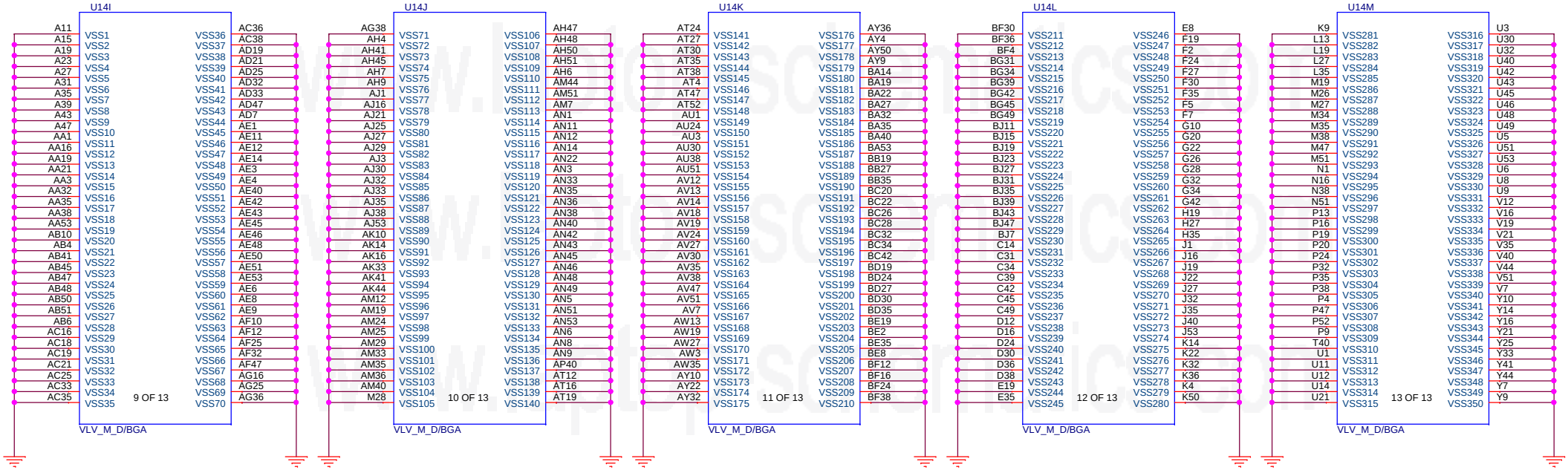

Quanta Computer Inc.

PROJECT : ZHQ

Size	Document Number	Rev
	Valley 9/9 (GND)	1A

Date: Thursday, July 03, 2014 Sheet 11 of 42

INTEL Debug Port

12

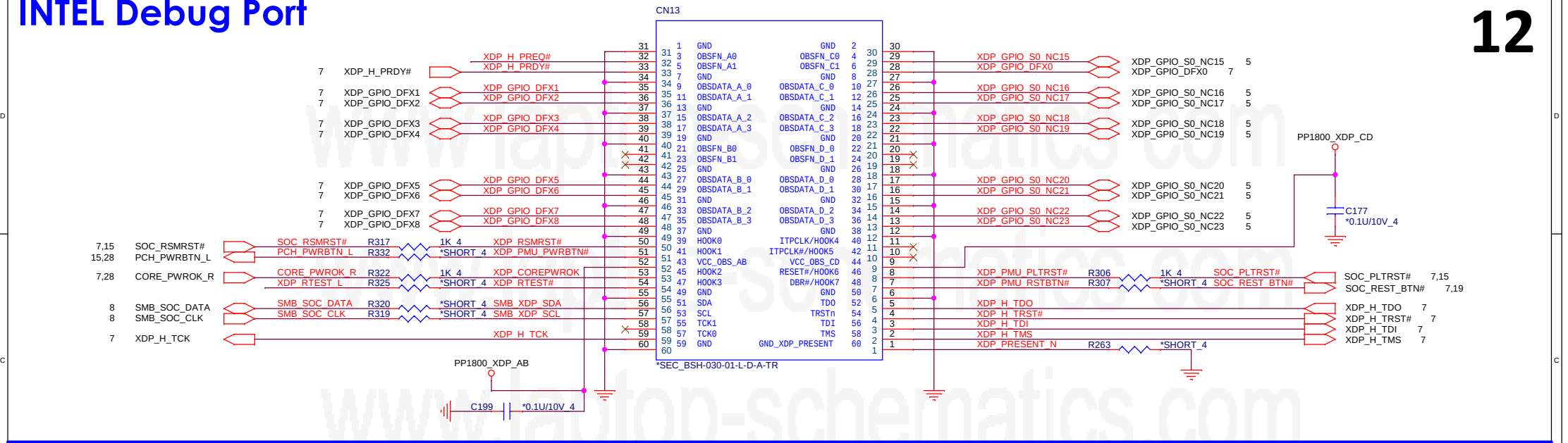

XDP

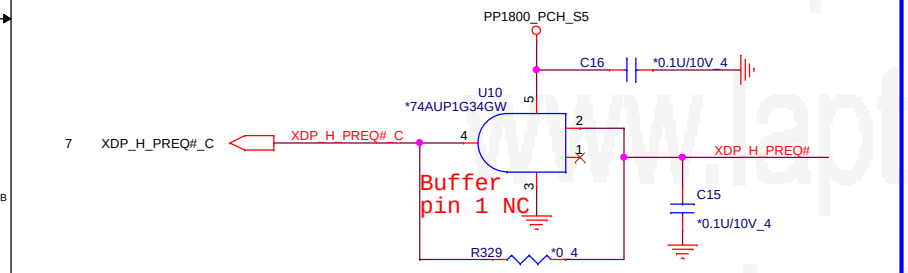

APS

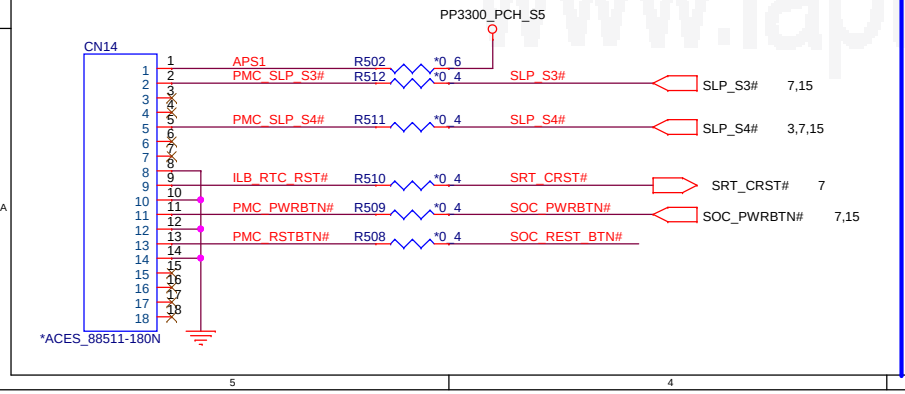

XDP

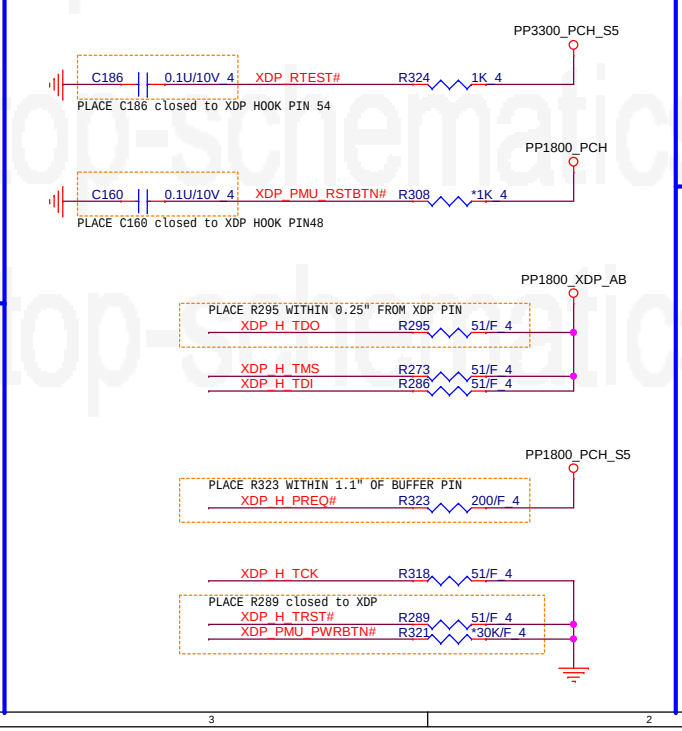

INTEL Debug Port Power

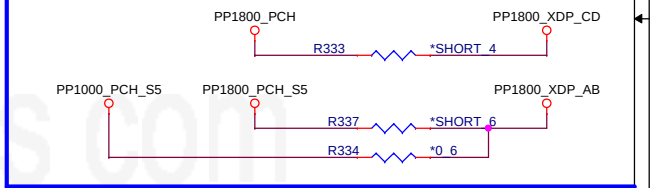

XDP Reset

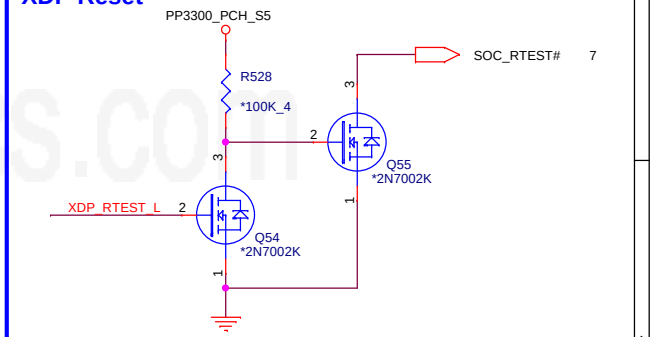

Quanta Computer Inc.

PROJECT : ZHQ

Size	Document Number	Rev
	CPU XDP / APS	1A

Date: Thursday, July 03, 2014 Sheet 12 of 42

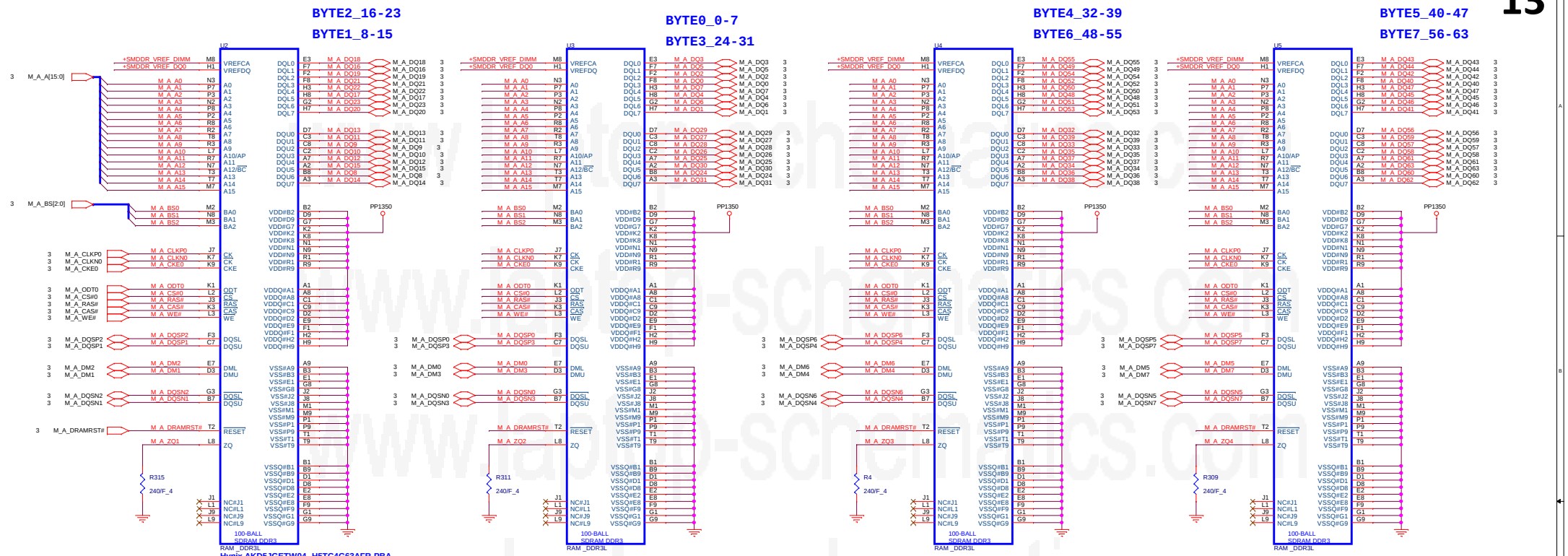

Hynix AKD5JGETW04--H5TC4G63AFR-PBA

Vendor	P/N	
Hynix	AKD5JGETW04	DDR3L 1600Mhz 4Gb
Elpida	AKD5JGST400	DDR3L 1333Mhz 4Gb
	AKD5JGST404	DDR3L 1600Mhz 4Gb

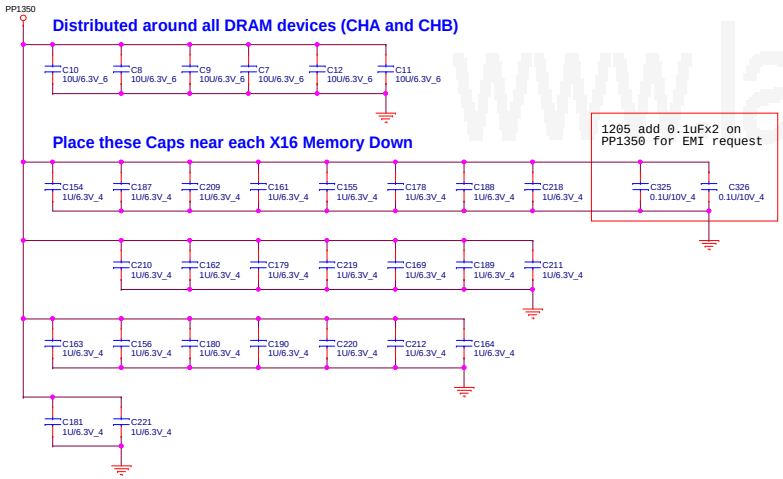

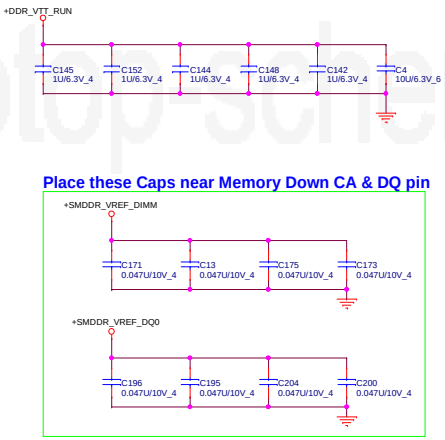

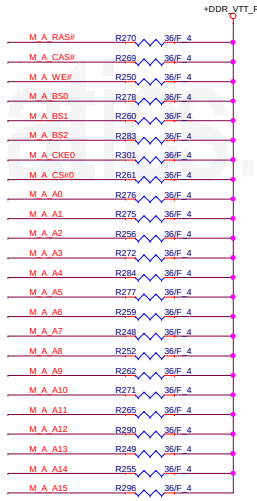

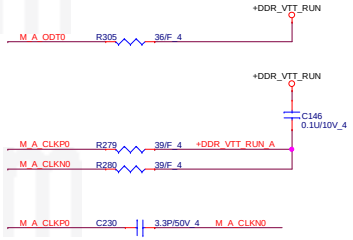

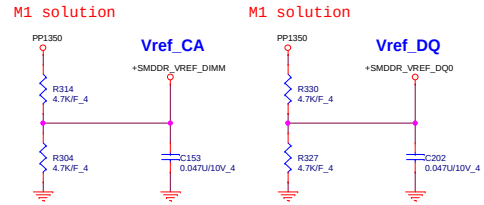

Quanta Computer Inc.

PROJECT : ZHQ

Size	Document Number	Rev
	DDR3L MEMORY DOWNx16 A	1A

Date: Thursday, July 03, 2014 Sheet 13 of 42

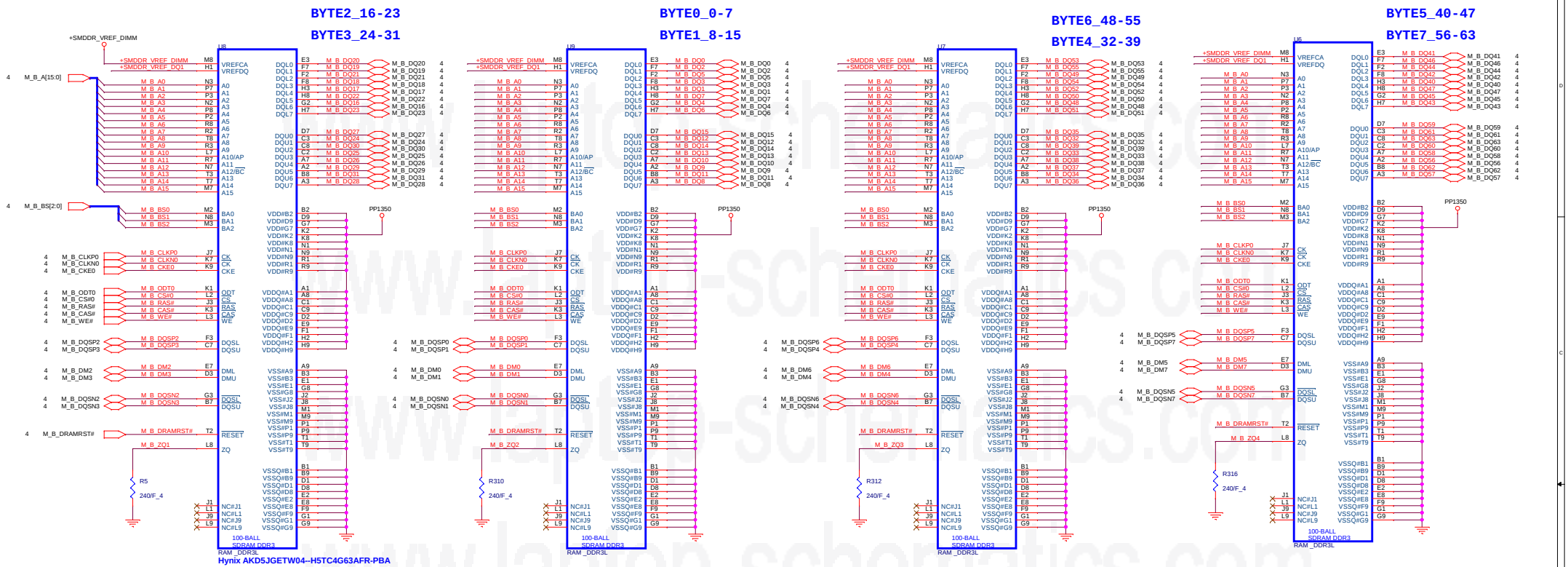

Hynix AKD5JGETW04--H5TC4G63AFR-PBA

Vendor	P/N	
Hynix	AKD5JGETW04	DDR3L 1600Mhz 4Gb
Elpida	AKD5JGST400	DDR3L 1333Mhz 4Gb
	AKD5JGST404	DDR3L 1333Mhz 4Gb

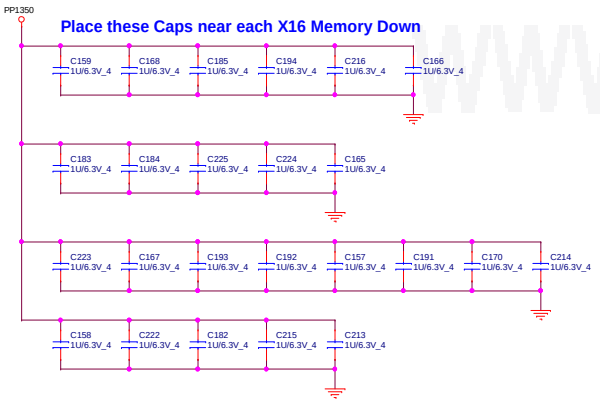

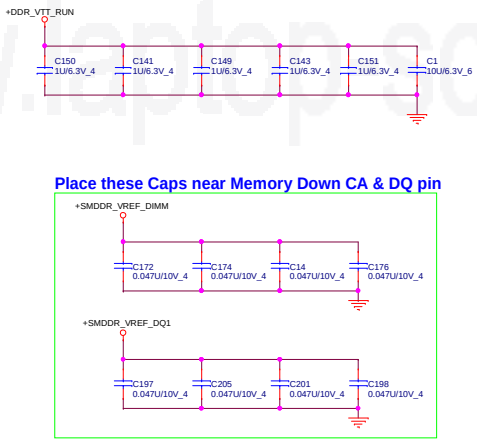

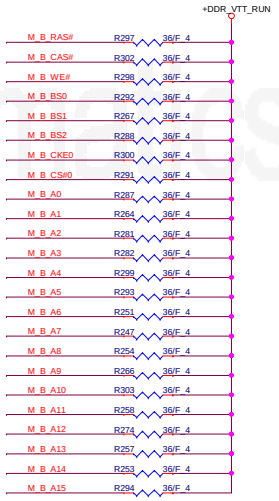

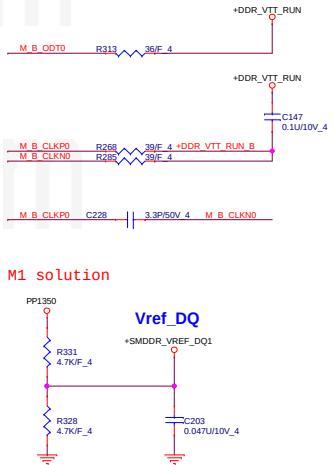

M1 solution

Quanta Computer Inc.

PROJECT : ZHQ

Size	Document Number	Rev
	DDR3L MEMORY DOWNx16 CH-B	1A

Date: Thursday, July 03, 2014 Sheet 14 of 42

PWRON SEQUENCE

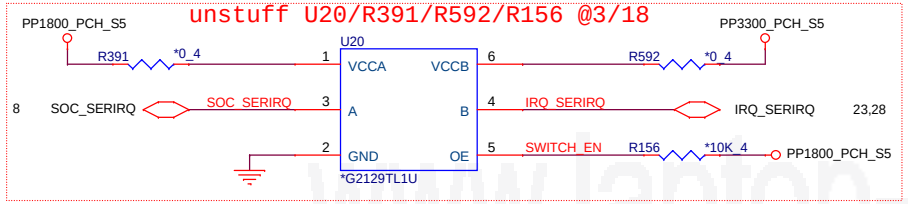

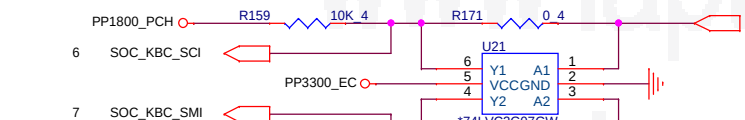

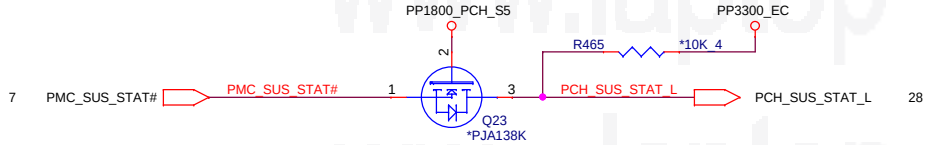

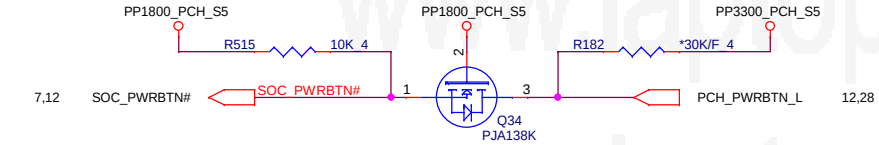

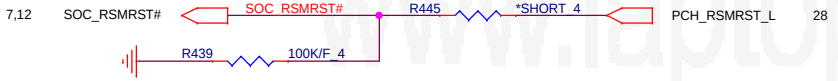

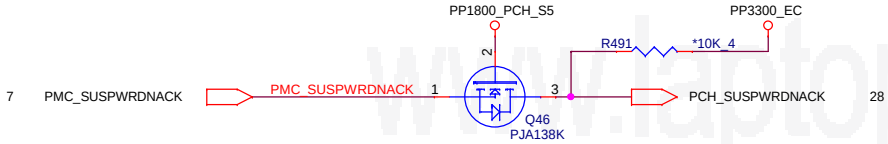

USB OC

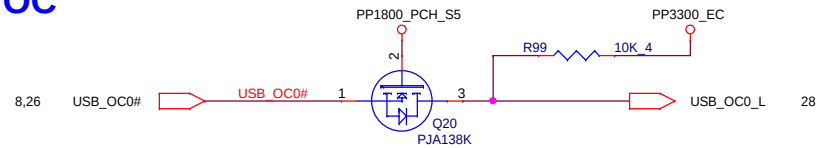

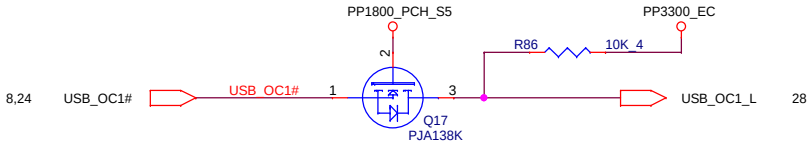

PWRON SEQUENCE

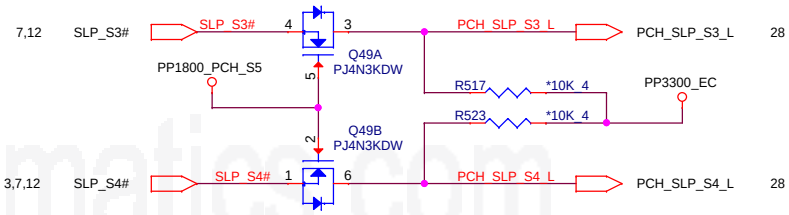

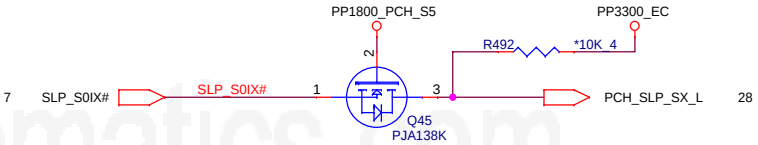

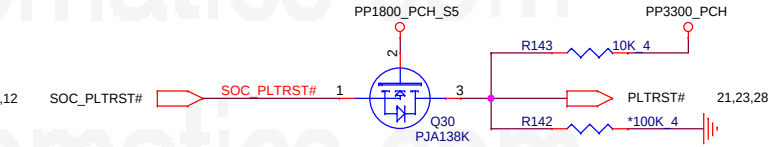

02/27 Cancel level shift for S3 leakage on PP1800_PCH issue.

Quanta Computer Inc.		
PROJECT : ZHQ		
Size	Document Number: Level Shifter (SOC_EC)	Rev 1A
Date: Thursday, July 03, 2014	Sheet 15 of 42	

Touch Panel level shift(TPS)

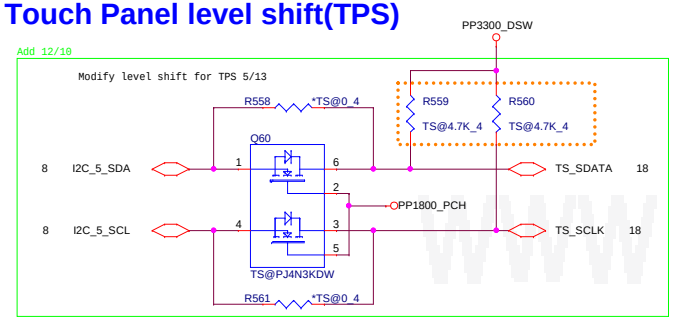

LTE

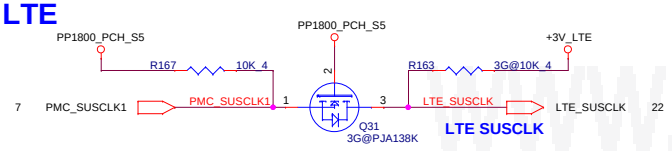

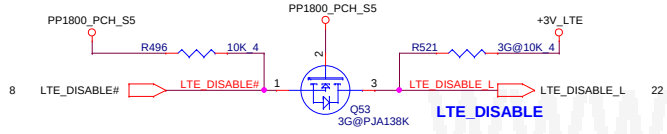

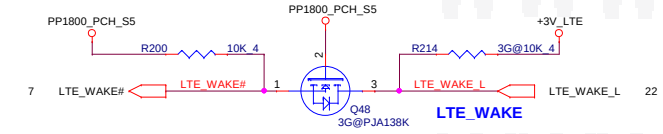

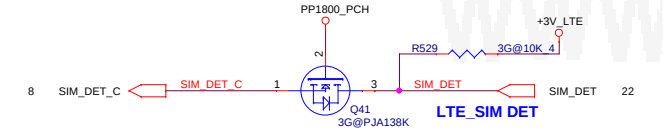

WIFI

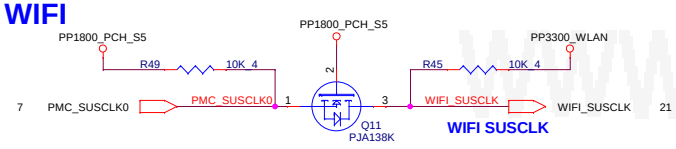

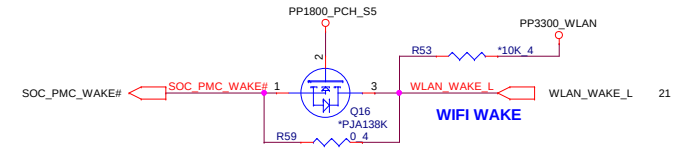

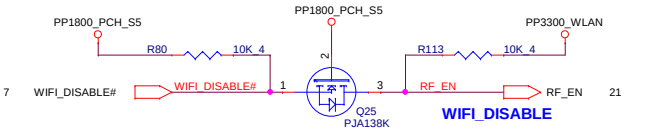

Touch Screen(TPS)

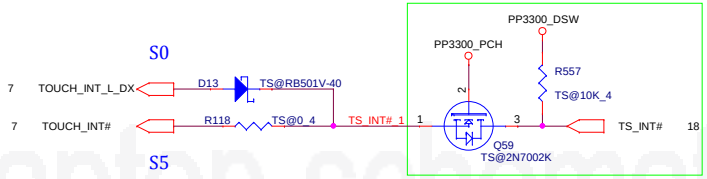

Track Pad

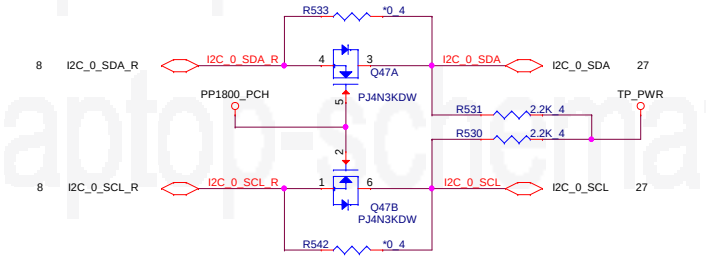

HW RESET

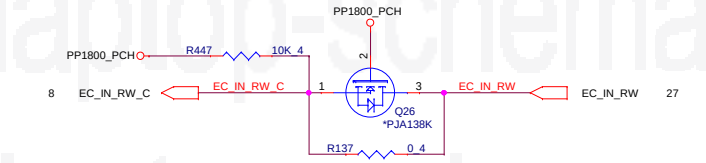

eDP control pin

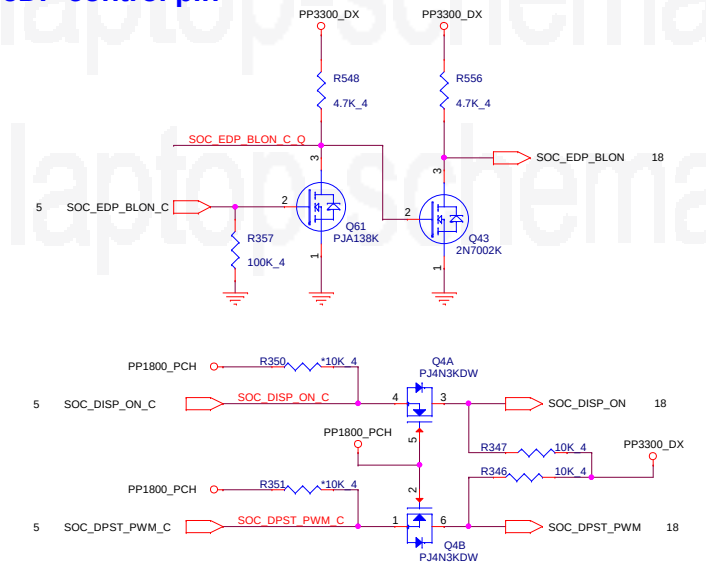

S5 Power Good(+3V_S5)

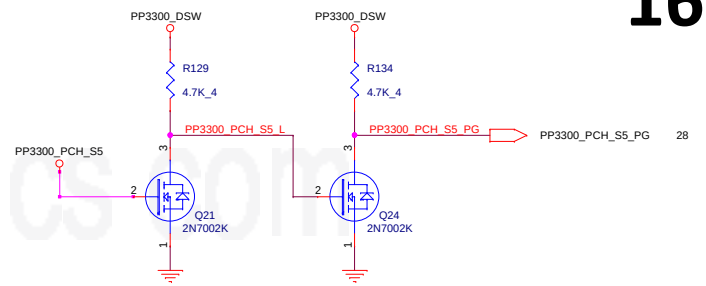

S0iX Power Good

for proto type only, can remove at MP stage if S0ix is not needed

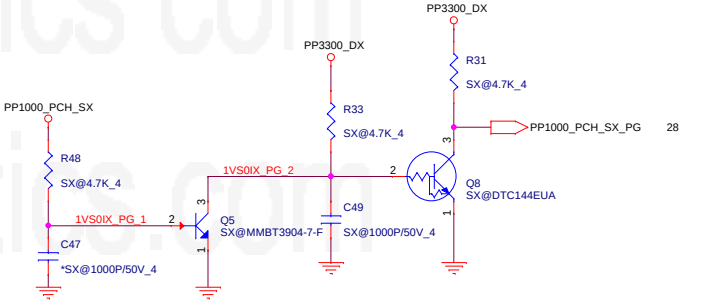

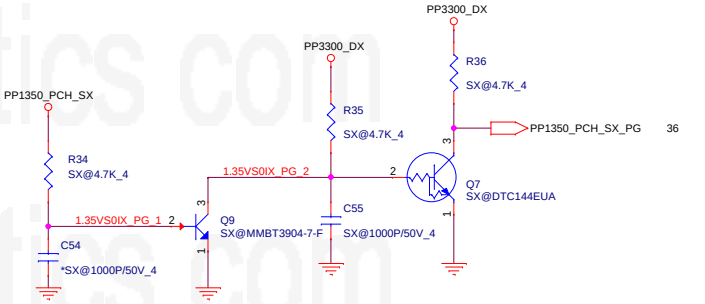

AC Detect

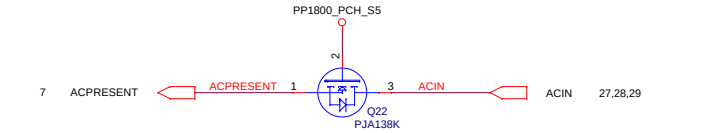

Quanta Computer Inc.

PROJECT : ZHQ

Size	Document Number	Rev
	Level Shifter (SOC_DEV)	1A

Date: Thursday, July 03, 2014 Sheet 16 of 42

SD/MMC CARD READER CONNECTOR (CBS)

03/18 Change SD card to full card socket for ME request.

This is full size SD card

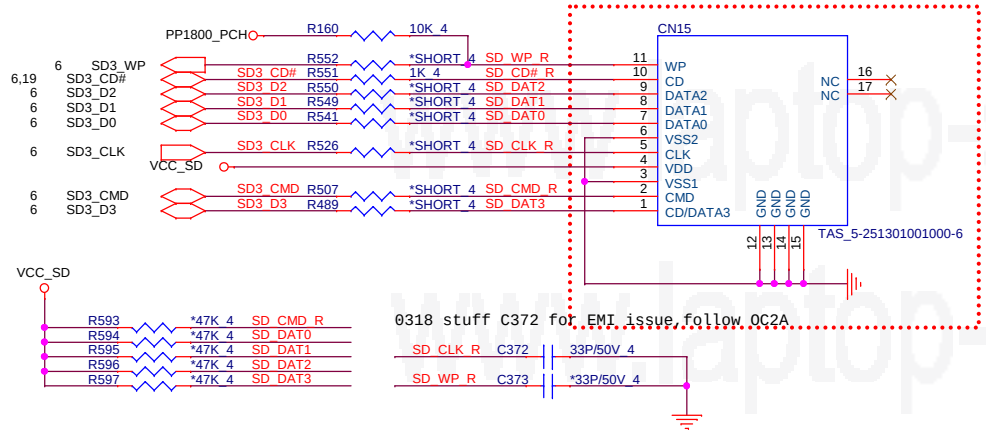

SD card power (CBS)

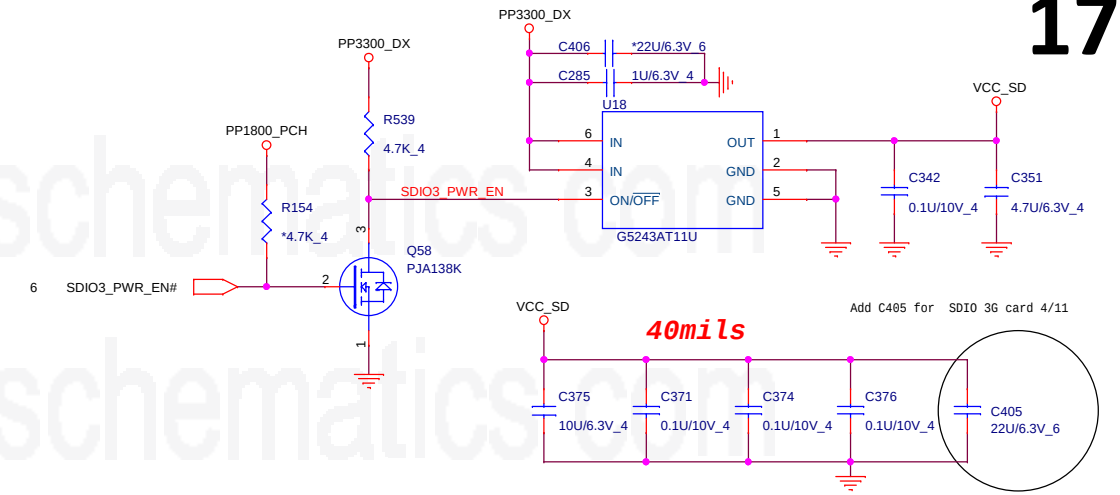

USB HUB (HUB)

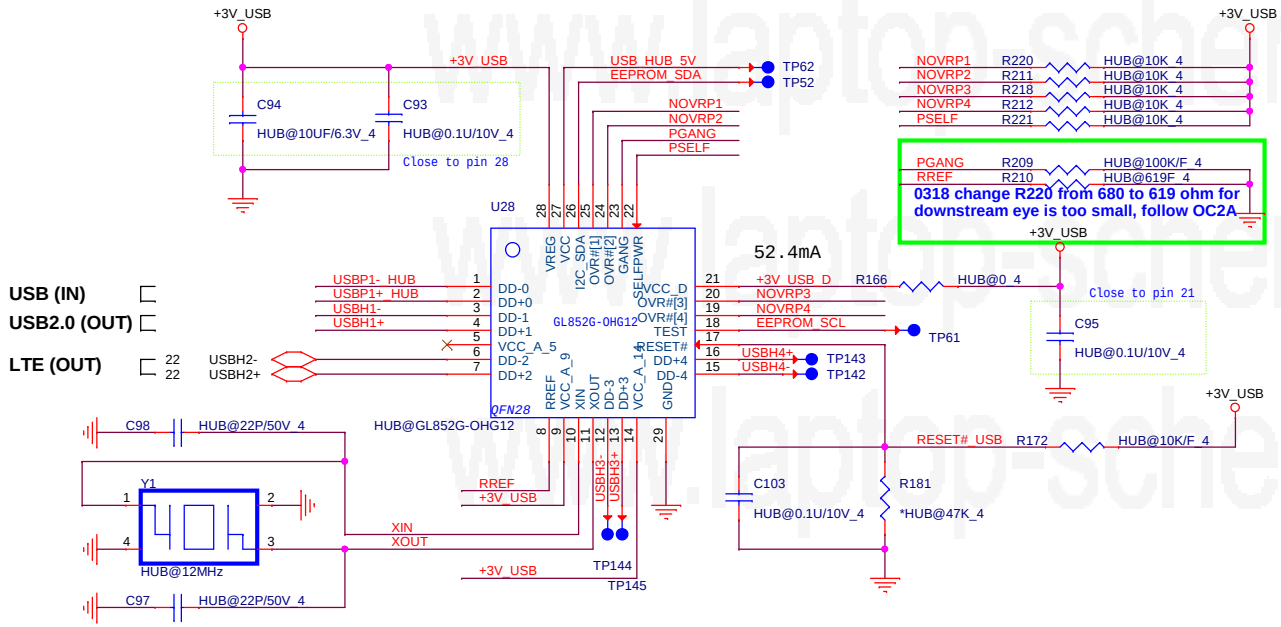

USB HUB power (HUB)

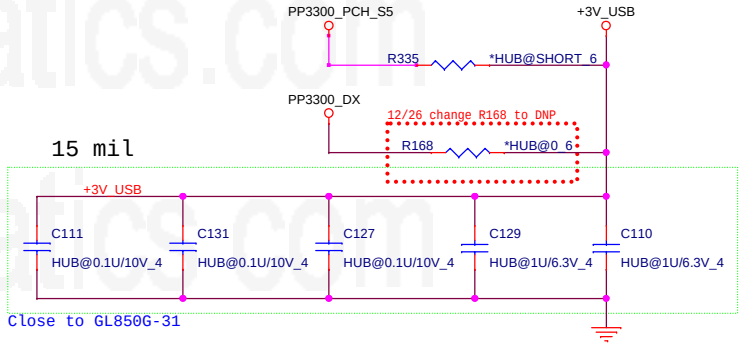

USB option for LTE/USB2.0 (HUB)

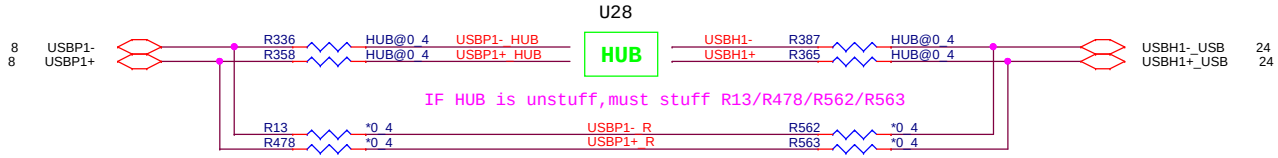

To IO/B

USB 2.0 CONN

Quanta Computer Inc.

PROJECT : ZHQ

Size	Document Number	Rev
	SDIO CardReader /USB HUB	1A

Date: Thursday, July 03, 2014 Sheet 17 of 42

LCD CONN

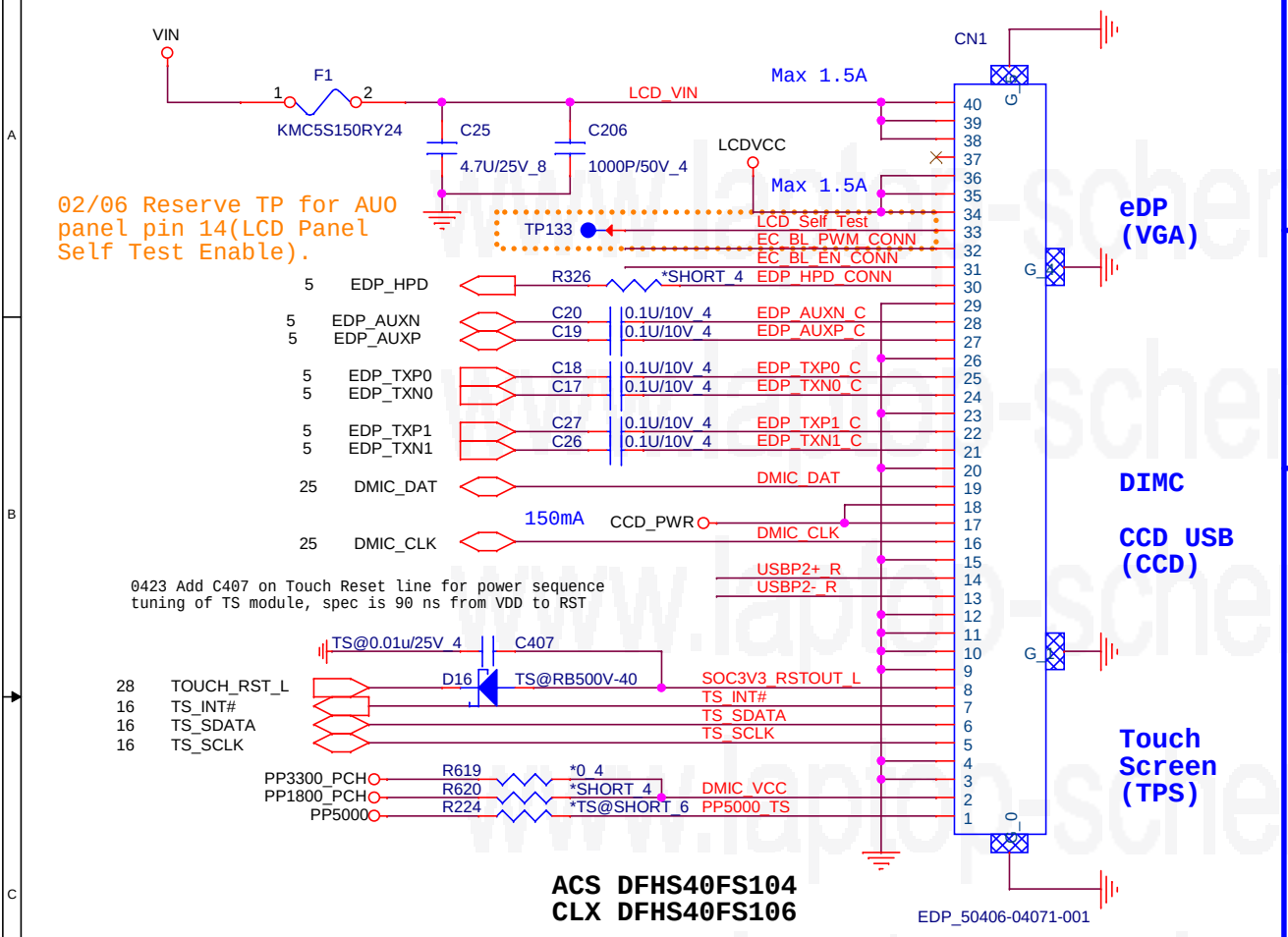

CCD Power(CCD)

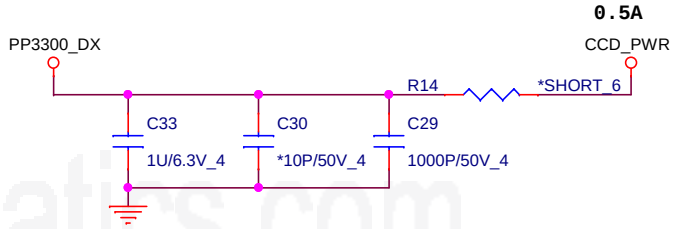

CCD USB(CCD)

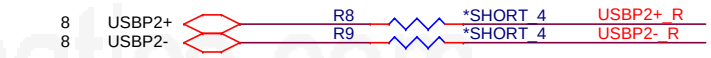

eDP panel control(LDS)

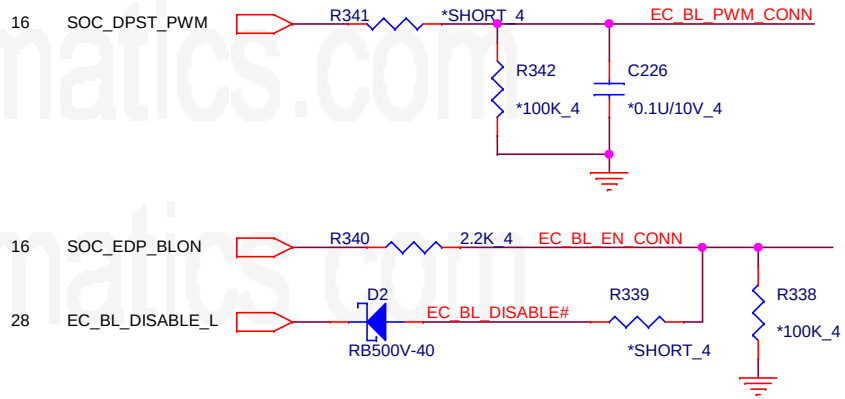

eDP Power(LDS)

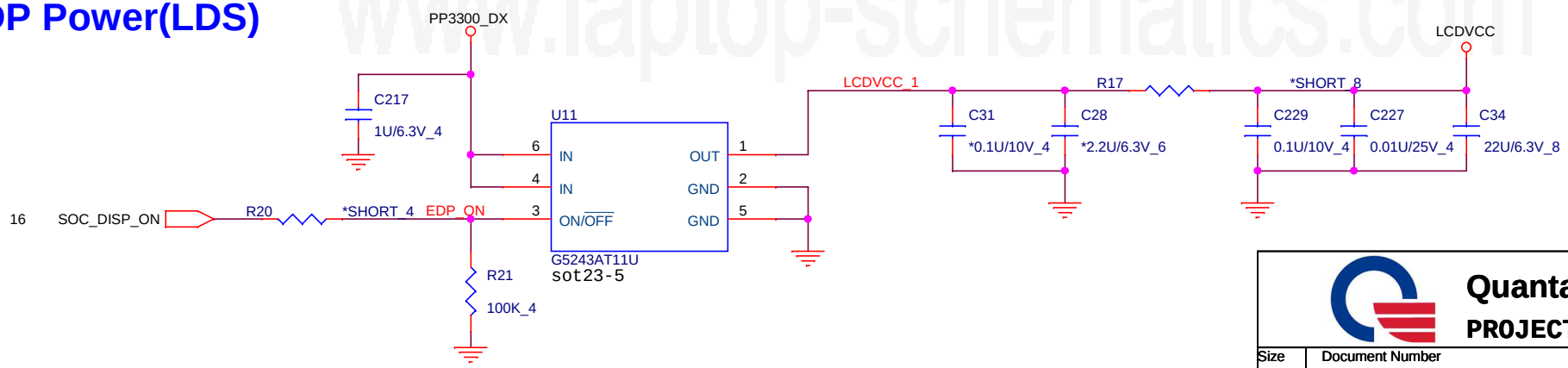

Quanta Computer Inc.

PROJECT : ZHQ

Size	Document Number	Rev
	LVDS/CCD/TS	1A

Date: Thursday, July 03, 2014 Sheet 18 of 42

GOOGLE Debug Port(MPC)

PIN7 OD
PIN14 OD
PIN19 OD
PIN22 OD
PIN28 OD
PIN30 OD
PIN37 OD
PIN38 OD
PIN39 OD
PIN41 OD
PIN43 OD
PIN44 OD
PIN45 OD
PIN46 OD
PIN47 OD
PIN48 OD
PIN49 OD
PIN50 OD

50 pin BTB is MUST, don't use 42 pin

Socket part number AXK750147G

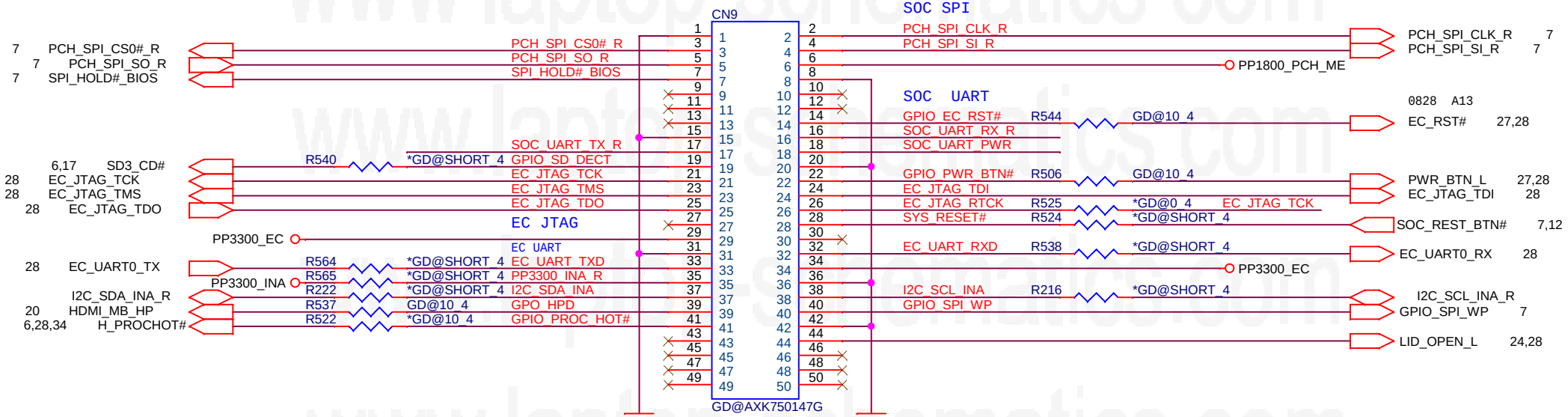

Servo/B I2C Power(MPC)

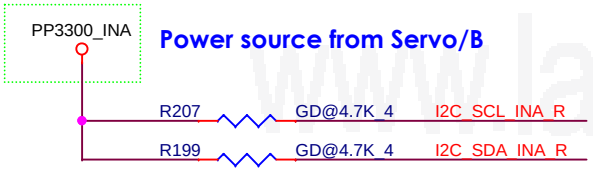

UART(MPC)

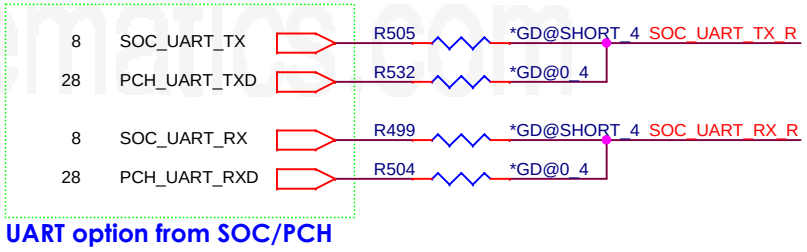

UART Power(MPC)

Quanta Computer Inc.

PROJECT : ZHQ

Size	Document Number	Rev
	Google Debug	1A
Date: Thursday, July 03, 2014	Sheet 19 of 42	

HDMI Cost Reduced level shift (HDM)

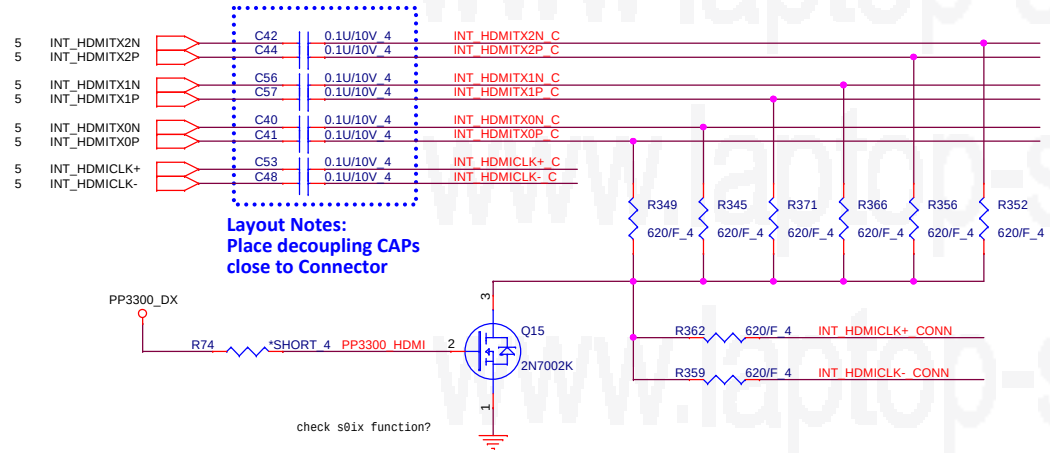

HDMI connector (HDM)

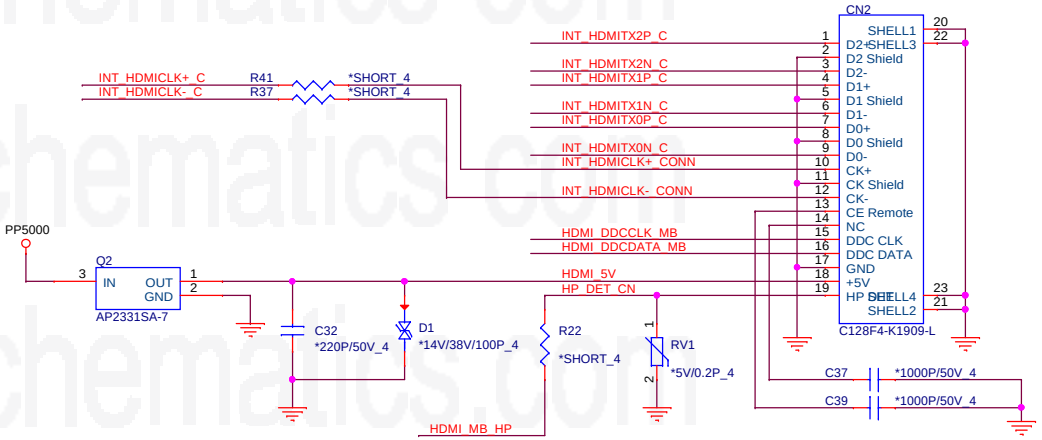

HDMI DDC (HDM)

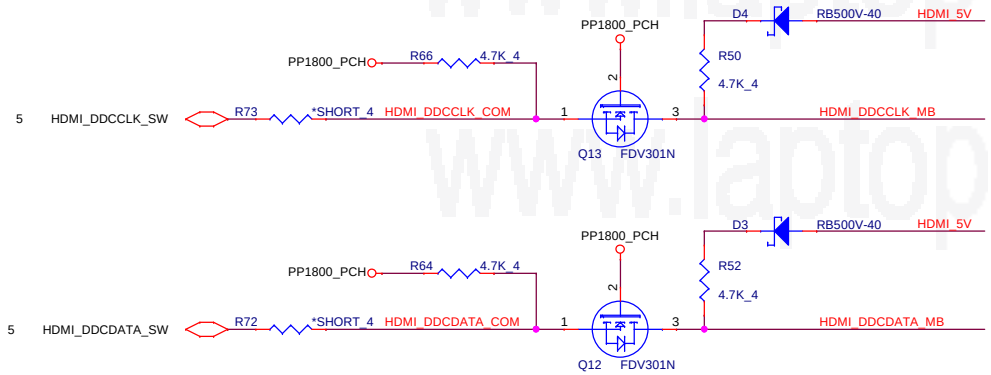

EMI

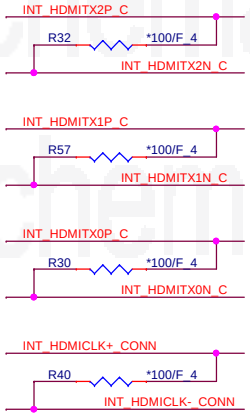

HDMI-detect (HDM)

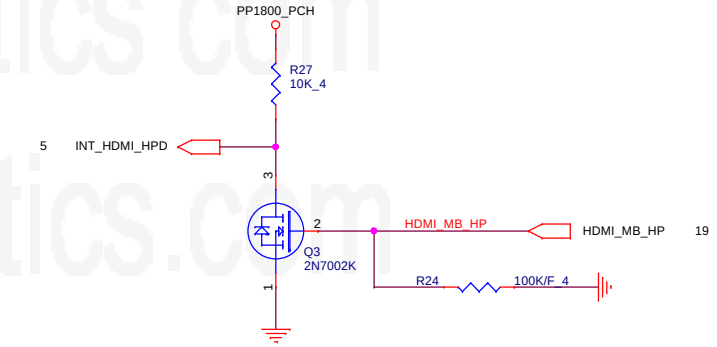

Quanta Computer Inc.

PROJECT : ZHQ

Size	Document Number	Rev
	HDMI	1A

Date: Thursday, July 03, 2014 Sheet 20 of 42

WIFI/BT COMBO NGFF E KEY(MNC)

21

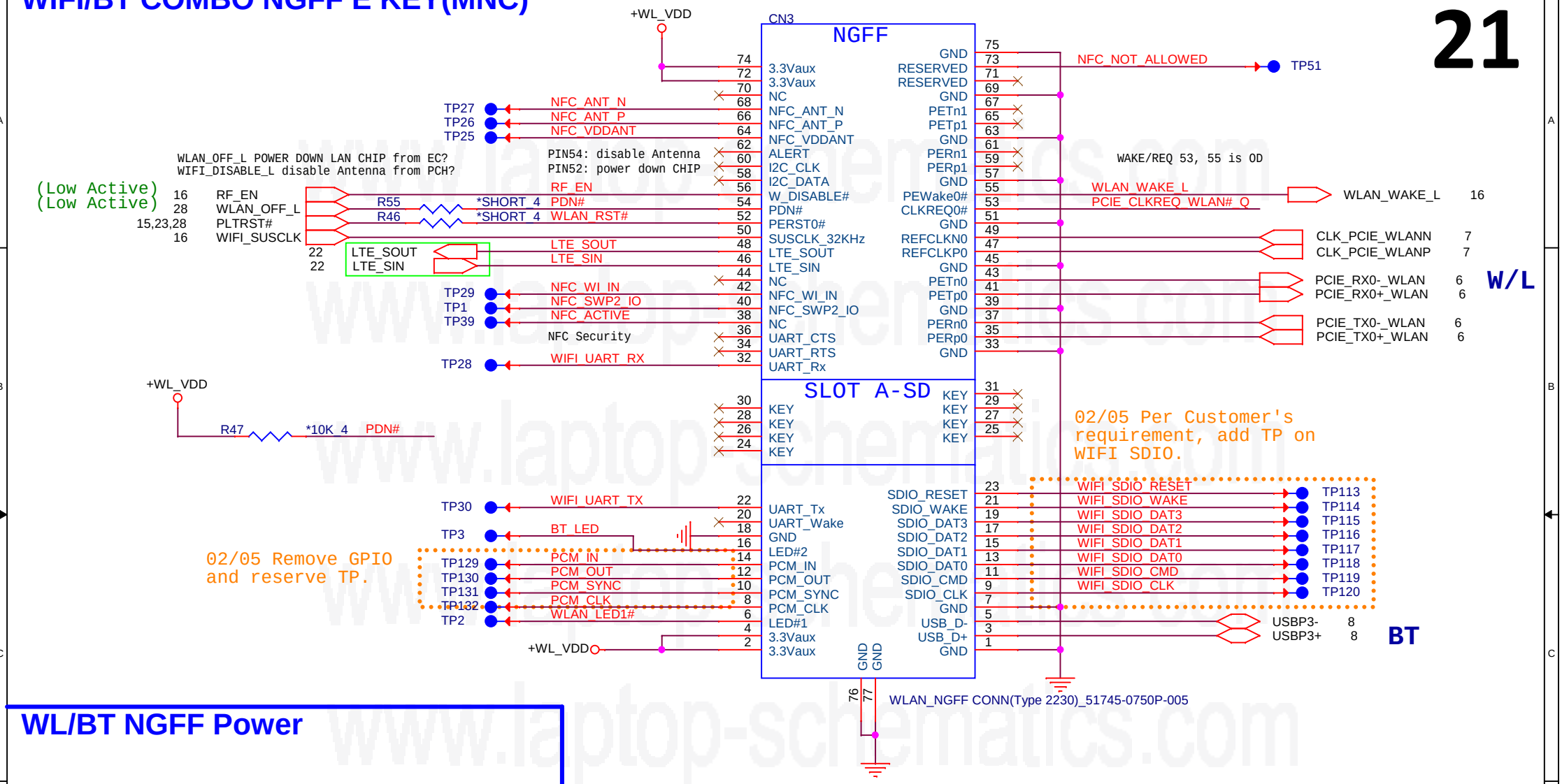

WL/BT NGFF Power

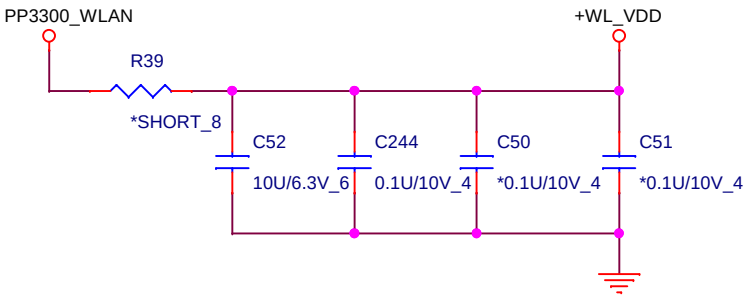

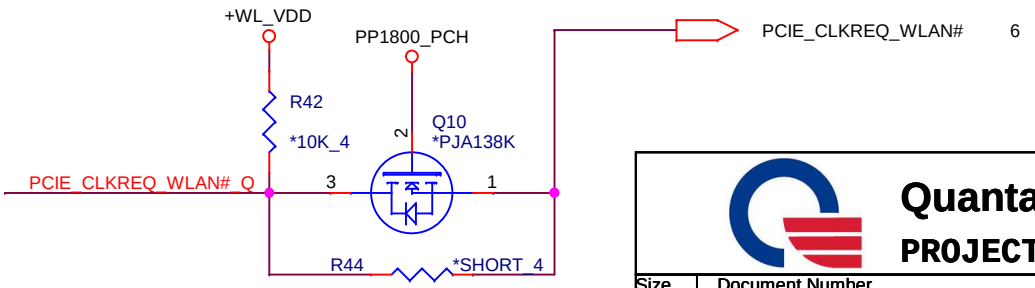

Quanta Computer Inc.

PROJECT : ZHQ

Size	Document Number	Rev
	WIFI / BT	1A

Date: Thursday, July 03, 2014 Sheet 21 of 42

EMMC (MMC)

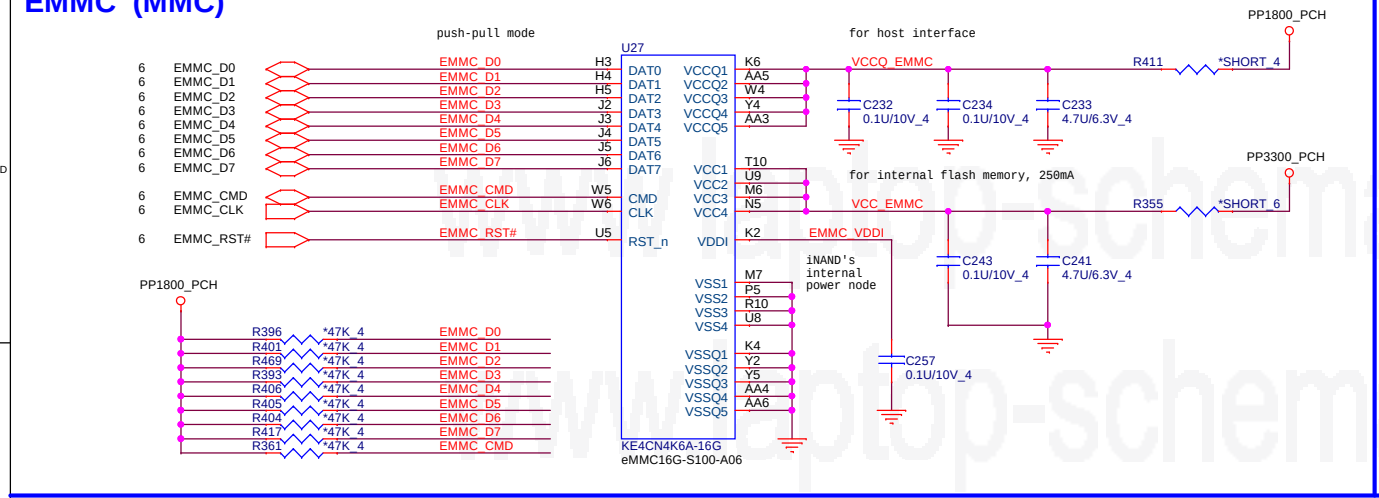

MultiMedia SIM (MNC)

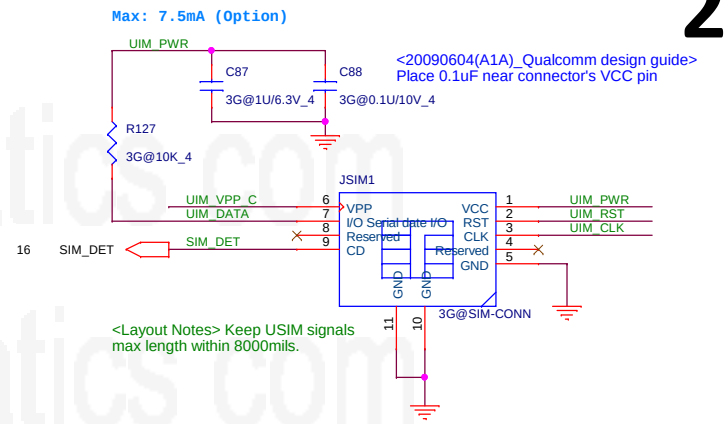

LTE NGFF (LTE)

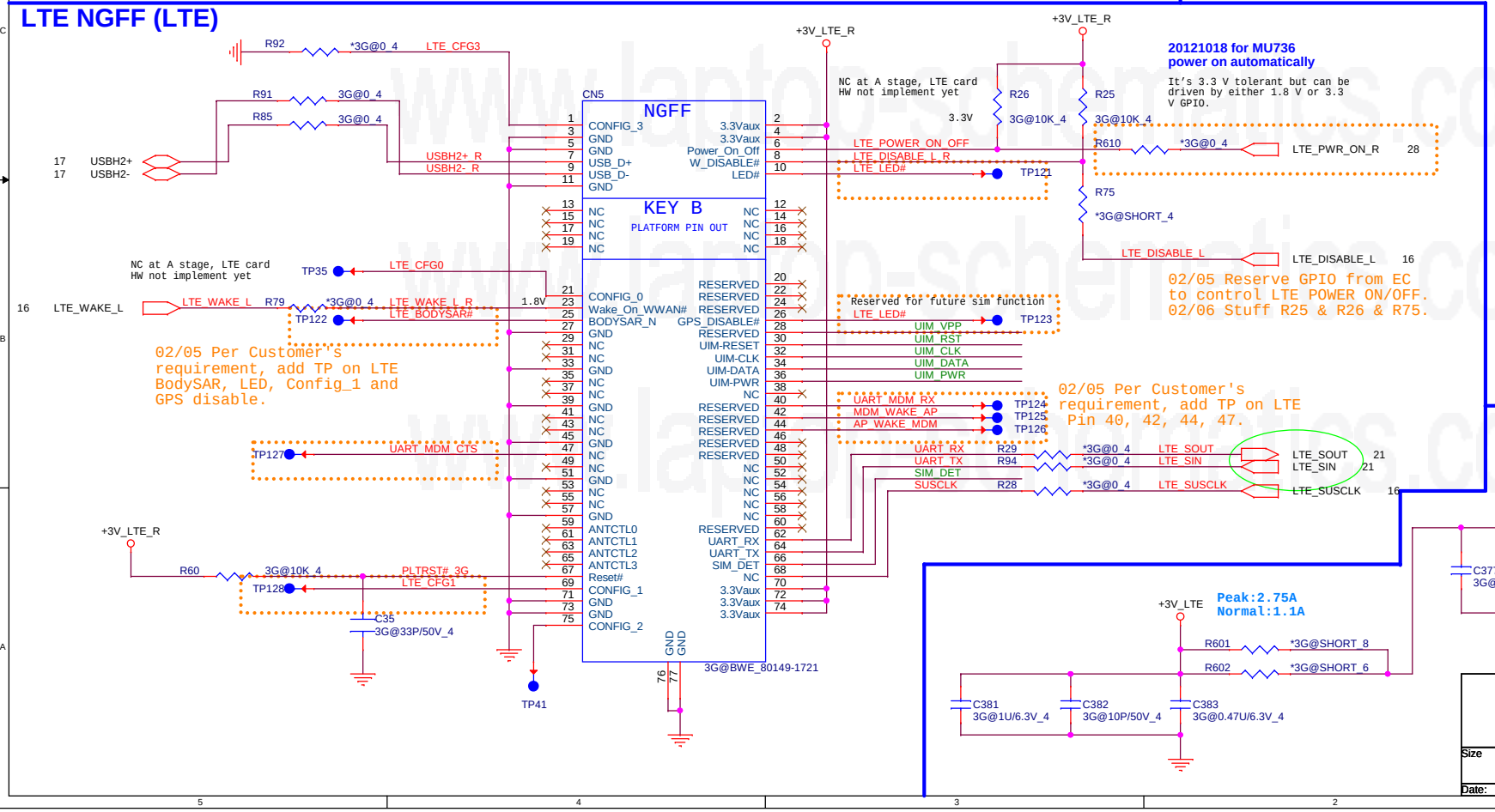

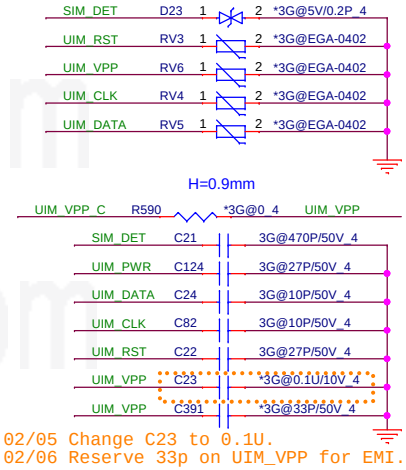

LTE NGFF Power

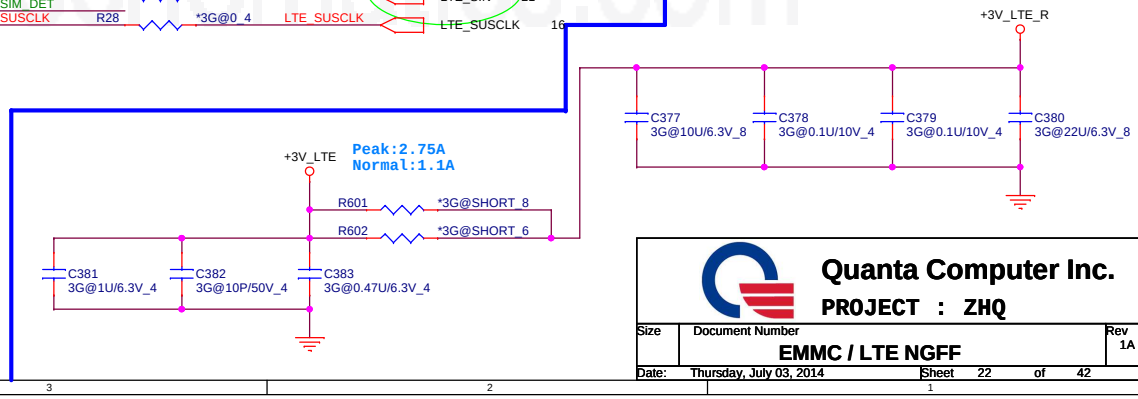

Quanta Computer Inc.

PROJECT : ZHQ

Size	Document Number	Rev
	EMMC / LTE NGFF	1A

Date: Thursday, July 03, 2014 Sheet 22 of 42

TPM (TPM)

23

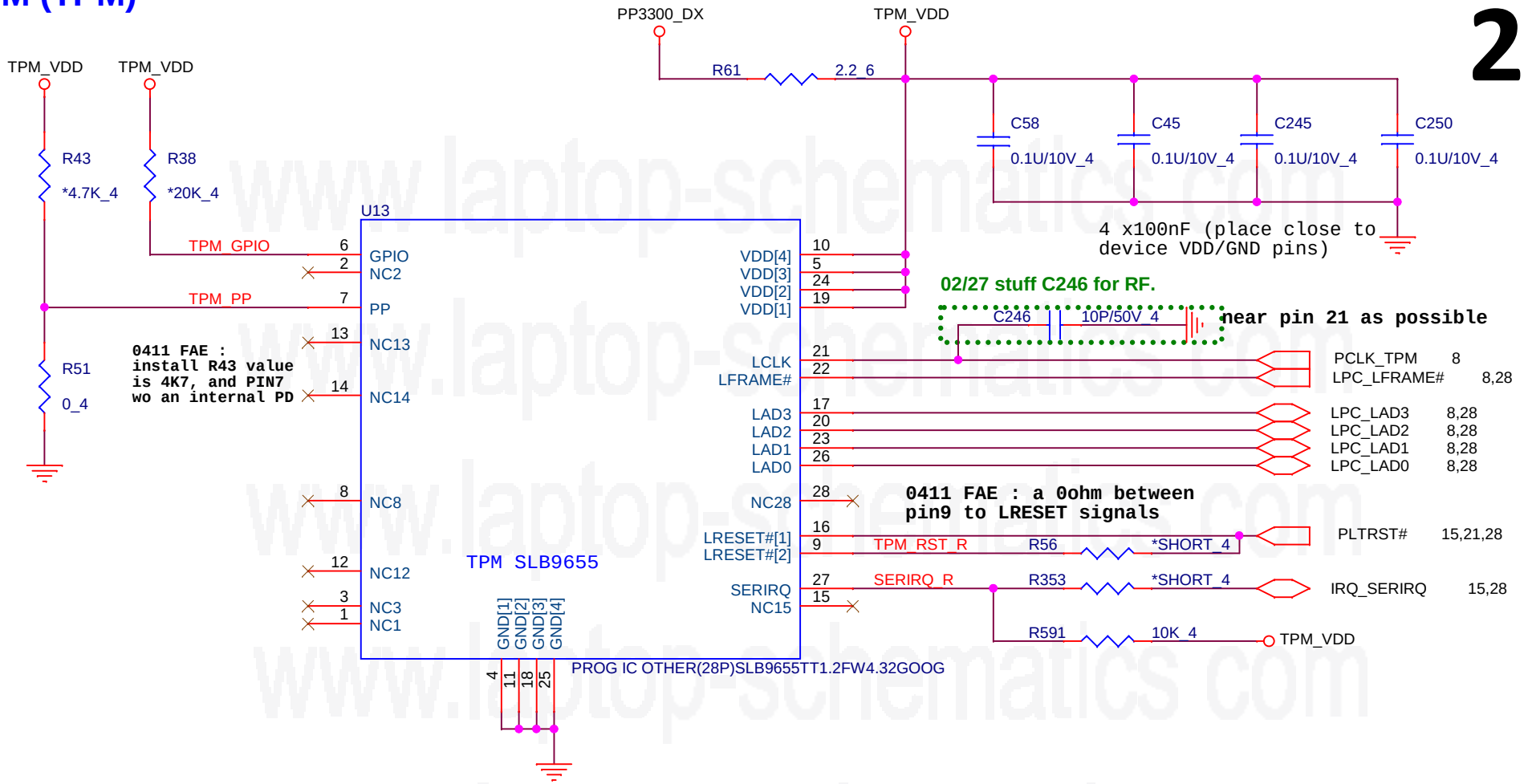

LED(UIF)

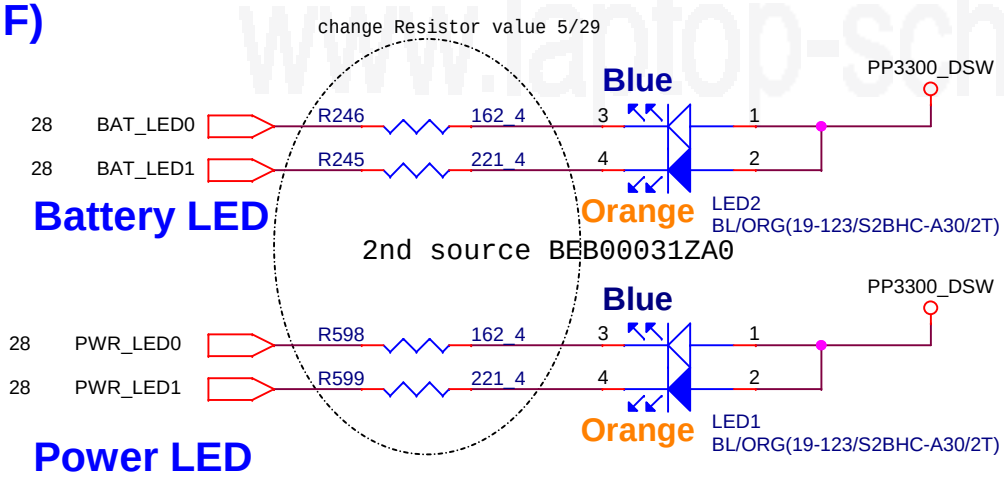

Quanta Computer Inc.

PROJECT : ZHQ

Size	Document Number	Rev
	TPM SLB9655 / LED	1A

Date: Thursday, July 03, 2014 Sheet 23 of 42

Thermal Sensor(THM)

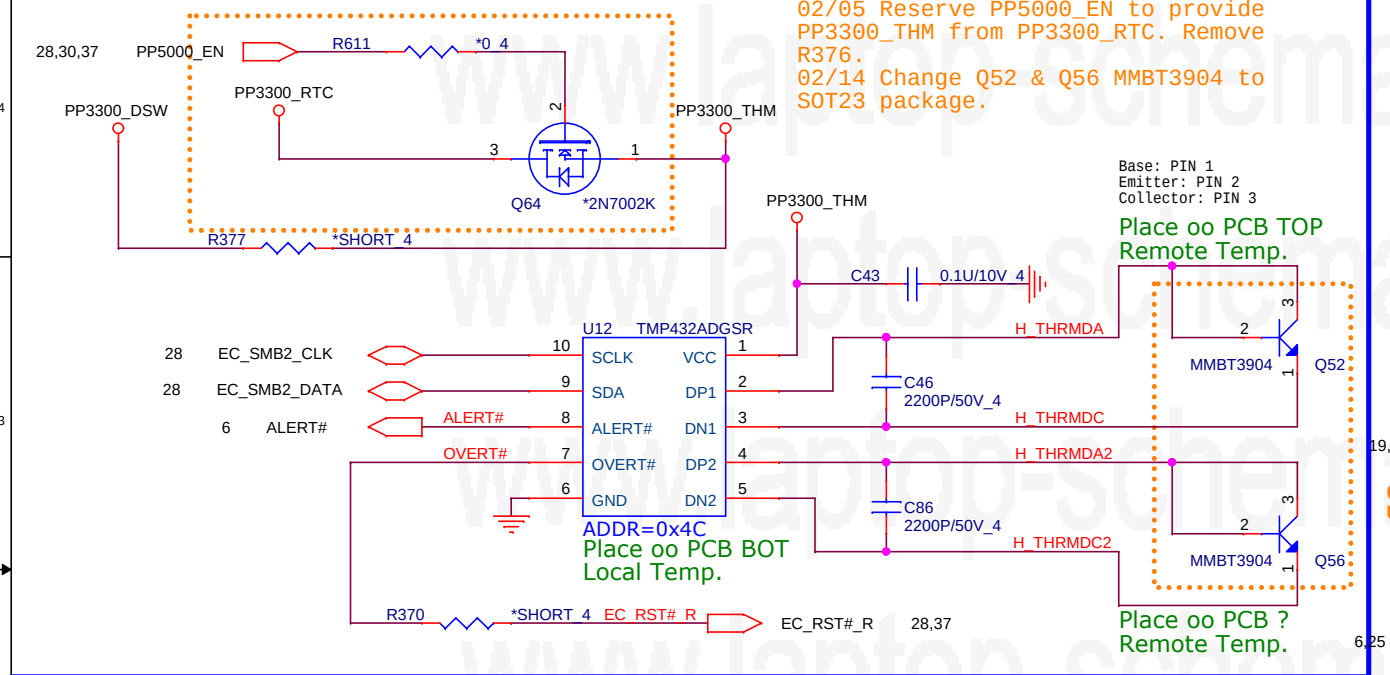

LTE Power(LTE)

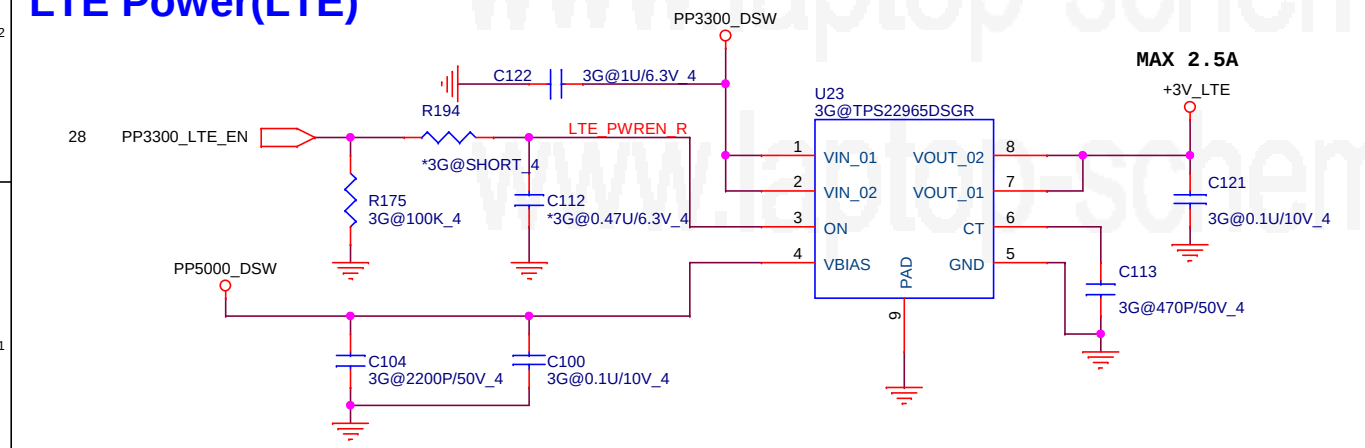

DB FFC conn 30P

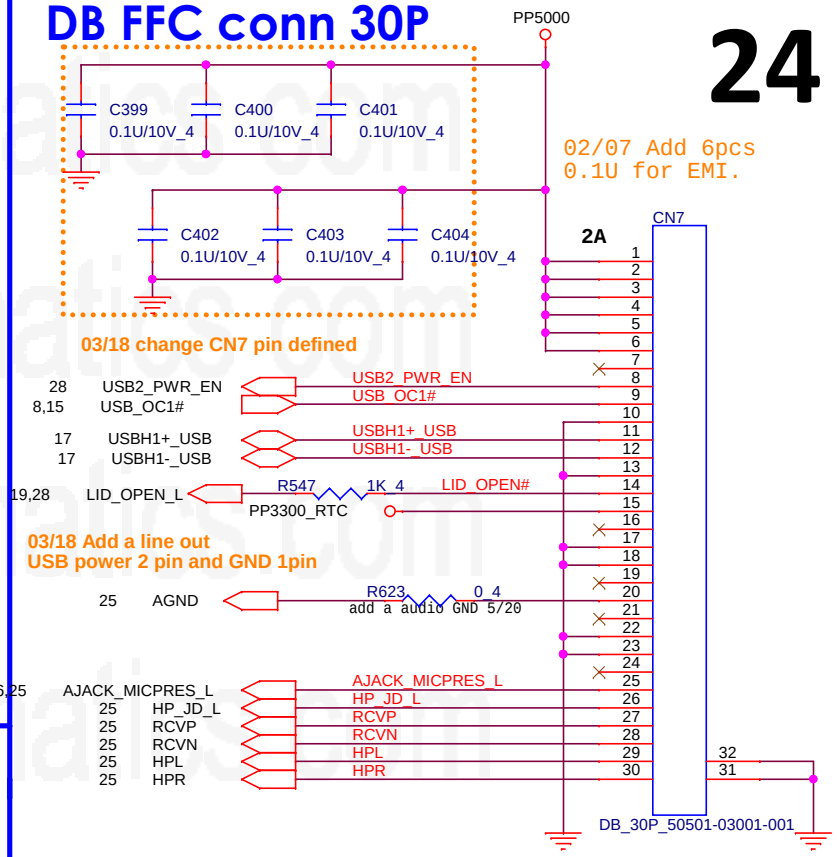

USB 2.0_ILIM_SEL (USB)

01/28 remove USB ILIM SEL.

Quanta Computer Inc.

PROJECT : ZHQ

Size	Document Number	Rev
	DB/Thermal sensor/LTE PWR	1A

Date: Thursday, July 03, 2014 Sheet 24 of 42

AUDIO CODEC (ADO)

25

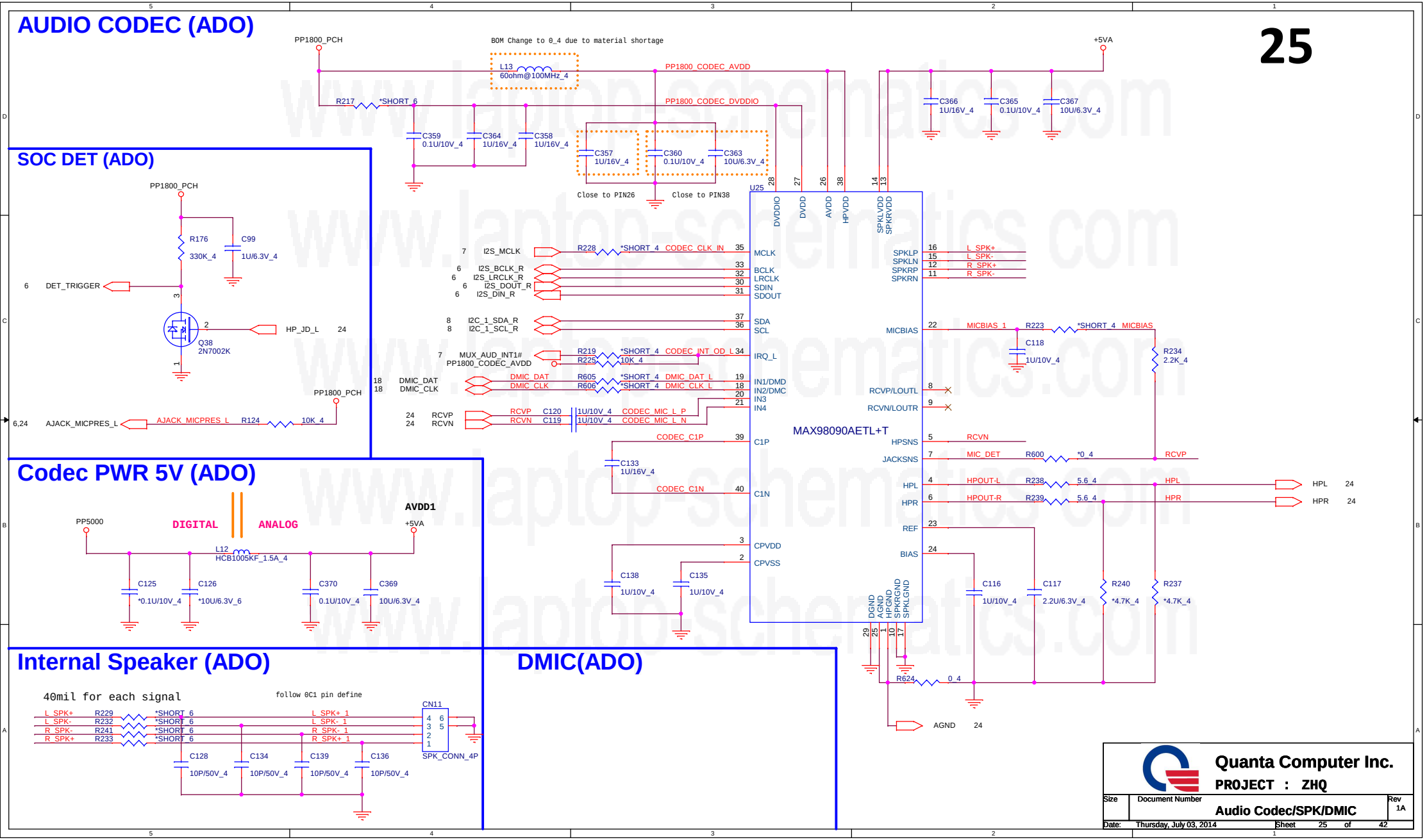

Quanta Computer Inc.

PROJECT : ZHQ

Size	Document Number	Rev
	Audio Codec/SPK/DMIC	1A

Date: Thursday, July 03, 2014 Sheet 25 of 42

USB3.0(USB)

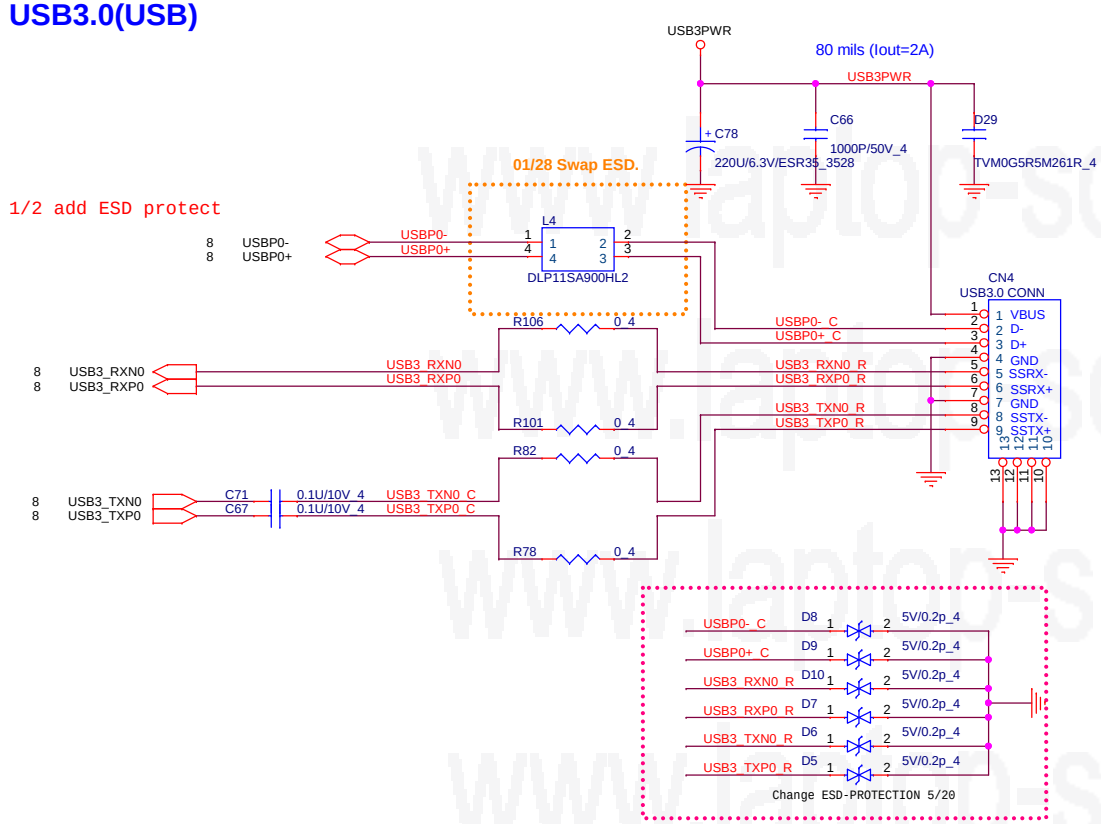

USB Switch

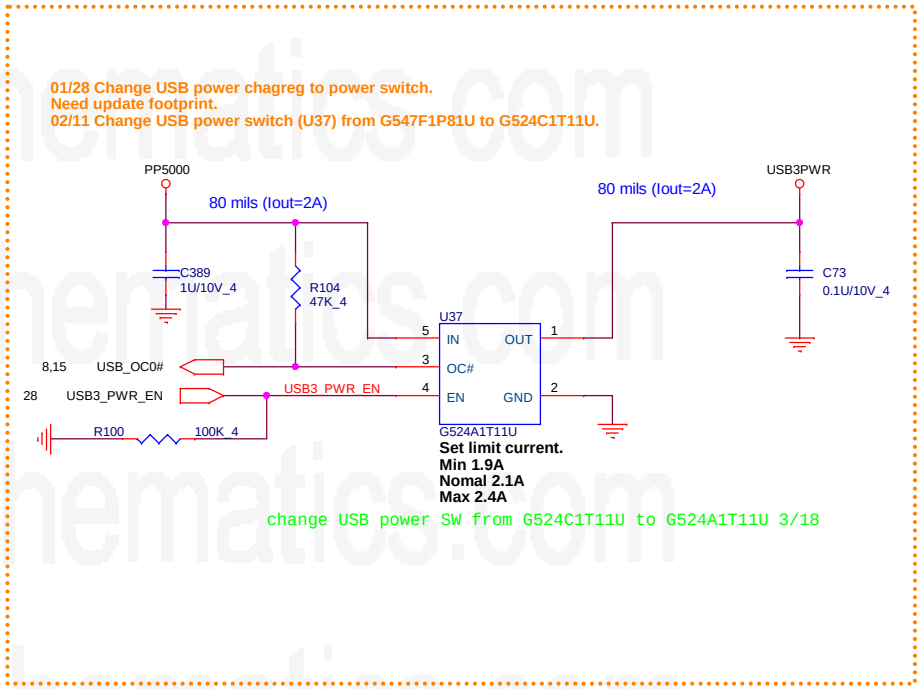

HOLE(OTH)

02/13 Update hole footprint.

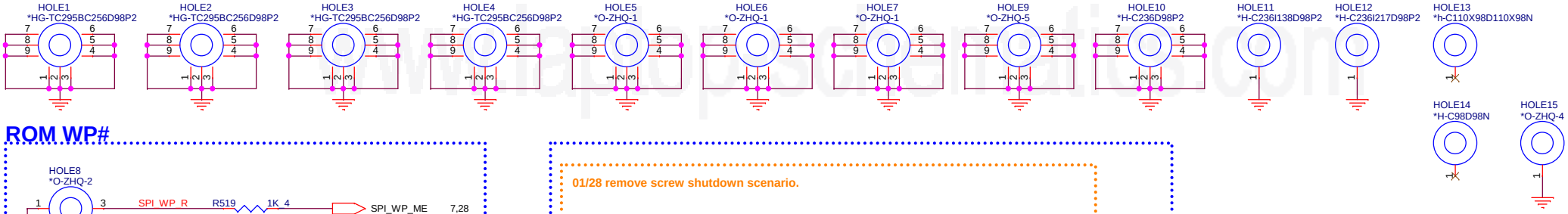

ROM WP#

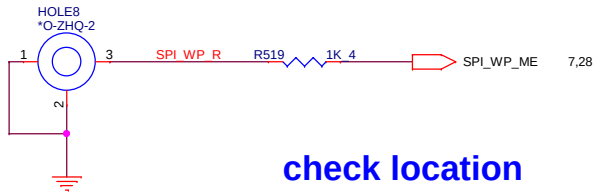

check location

01/28 remove screw shutdown scenario.

Quanta Computer Inc.

PROJECT : ZHQ

Size	Document Number	Rev
	USB3/Hole	1A

Date: Thursday, July 03, 2014 Sheet 26 of 42

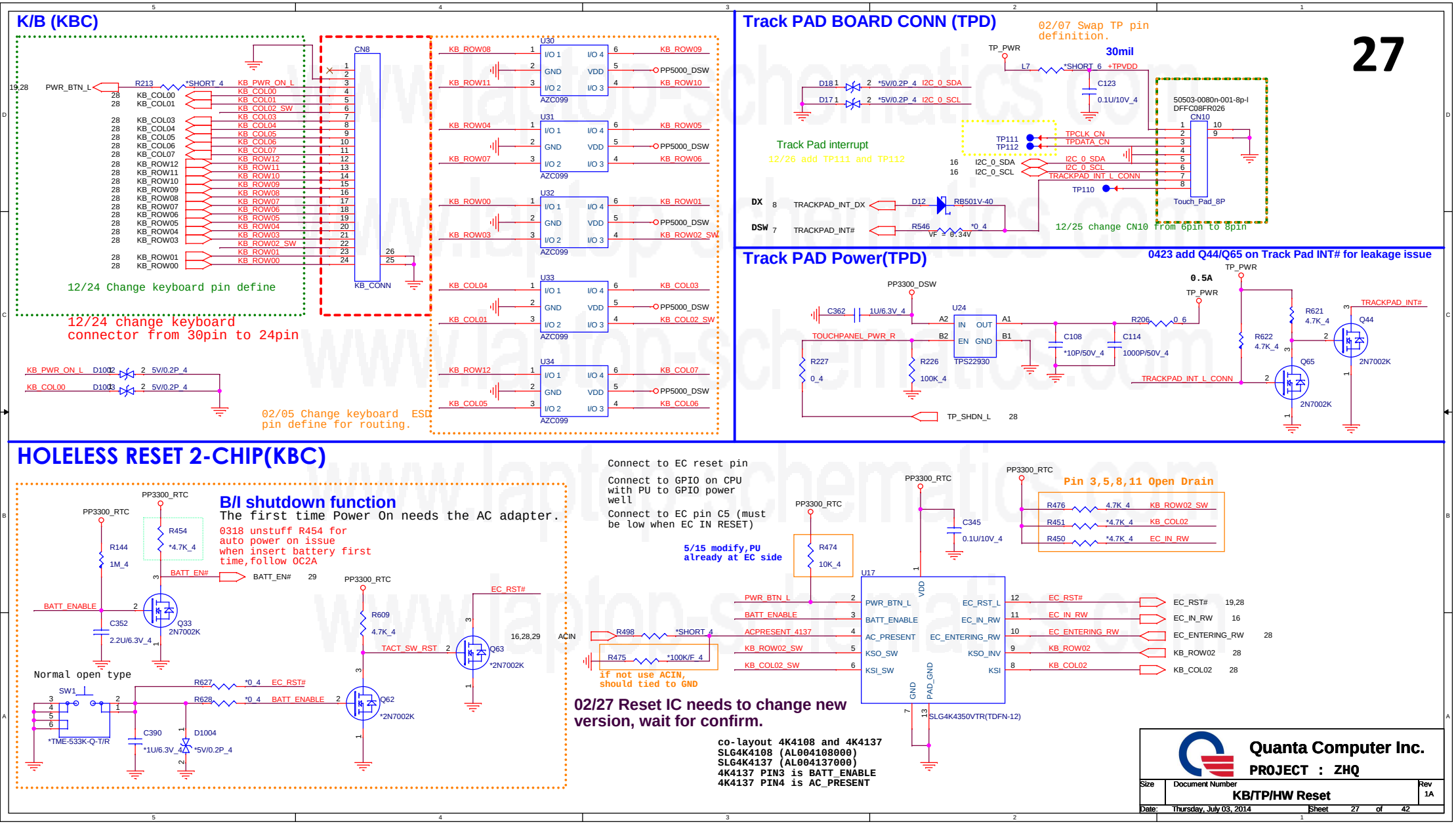
K/B (KBC)
12/24 Change keyboard pin define
12/24 change keyboard connector from 30pin to 24pin
02/05 Change keyboard ESD pin define for routing.
Track PAD BOARD CONN (TPD)
02/07 Swap TP pin definition.
30mil
Track Pad interrupt
12/26 add TP111 and TP112
12/25 change CN10 from 6pin to 8pin
Track PAD Power(TPD)
0423 add Q44/Q65 on Track Pad INT# for leakage issue
HOLELESS RESET 2-CHIP(KBC)
B/I shutdown function
The first time Power On needs the AC adapter.
0318 unstuff R454 for auto power on issue when insert battery first time,follow OC2A
Normal open type
Connect to EC reset pin
Connect to GPIO on CPU with PU to GPIO power well
Connect to EC pin C5 (must be low when EC IN RESET)
5/15 modify,PU already at EC side
Pin 3,5,8,11 Open Drain
if not use ACIN, should tied to GND
02/27 Reset IC needs to change new version, wait for confirm.
co-layout 4K4108 and 4K4137
SLG4K4108 (AL004108000)
SLG4K4137 (AL004137000)
4K4137 PIN3 is BATT_ENABLE
4K4137 PIN4 is AC_PRESENT
Quanta Computer Inc.
PROJECT : ZHQ
Size
Document Number
KB/TP/HW Reset
Rev 1A
Date: Thursday, July 03, 2014
Sheet 27 of 42

27

EC(KBC)

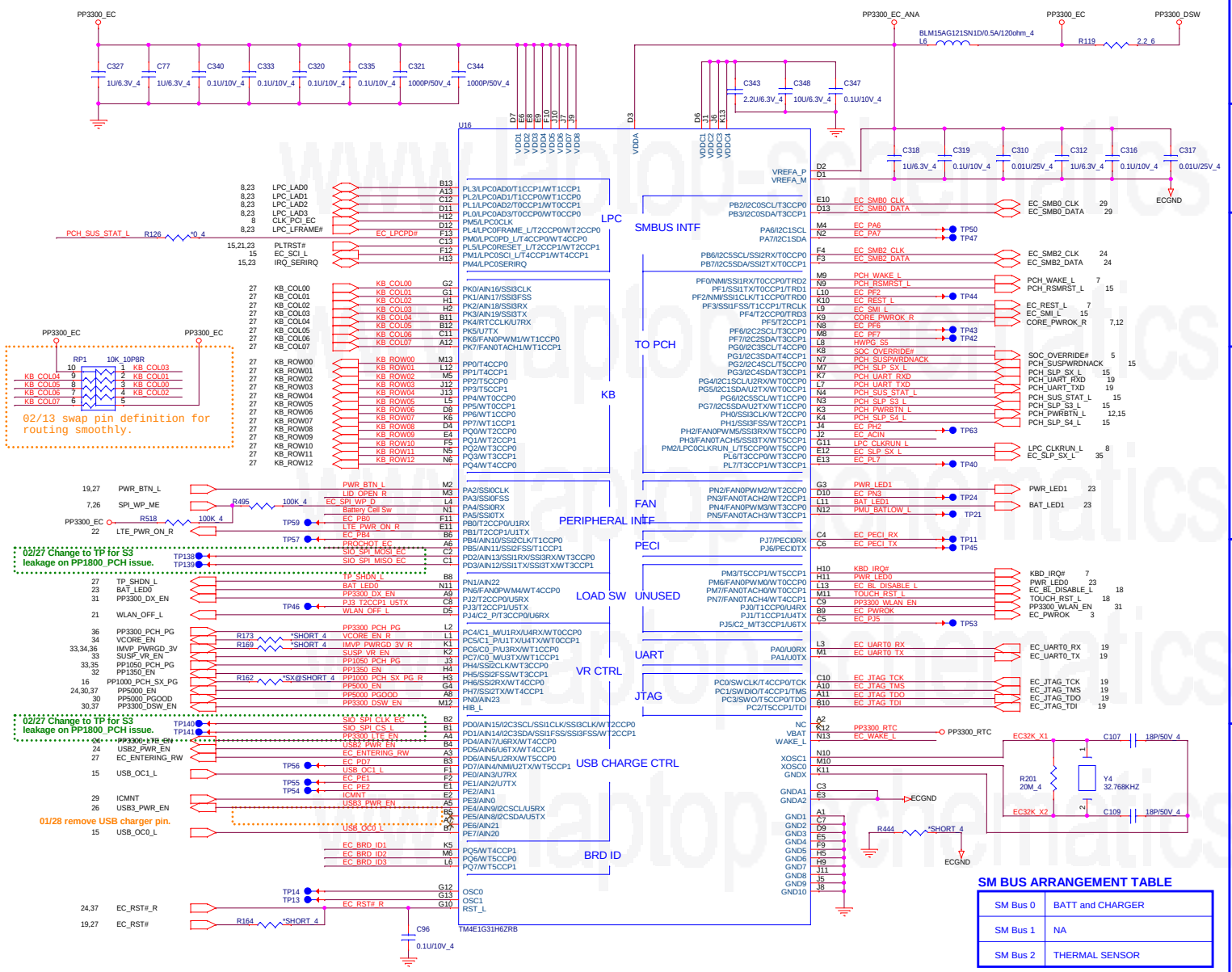

SM BUS ARRANGEMENT TABLE

SM Bus 0	BATT and CHARGER
SM Bus 1	NA
SM Bus 2	THERMAL SENSOR

Pull-up(KBC)

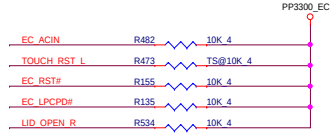

LID_OPEN(KBC)

ACIN_EC(KBC)

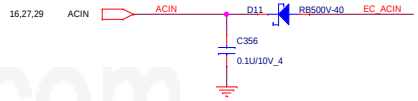

SM BUS/I2C PU(KBC)

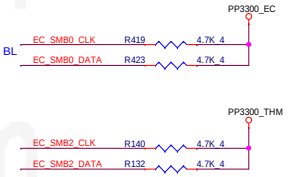

PROCHOT_EC(KBC)

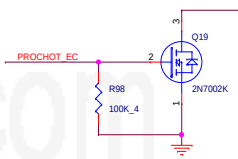

EC HIB WAKE SOURCES

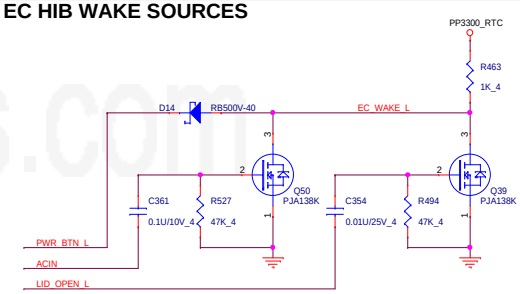

Board_ID(KBC)

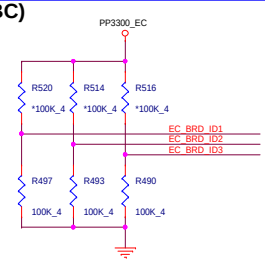

Pull-down(KBC)

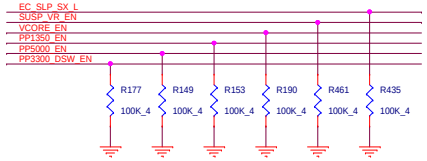

HWPG(KBC)

Battery cell select

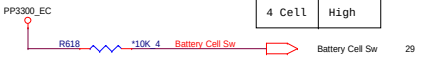

3 Cell	float
4 Cell	High

OD pin list

EC_REST_L
BAT_LED0
BAT_LED1
PCH_RSMRST_L
SMBUS
IRQ_SERIRQ
EC_BL_DISABLE_L

For testing only

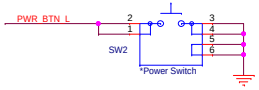

Quanta Computer Inc.
PROJECT : ZHQ

Size	Document Number	Rev
	KBC TI TM4E1G31H6ZRBI	1A

Date: Thursday, July 03, 2014 Sheet 28 of 42

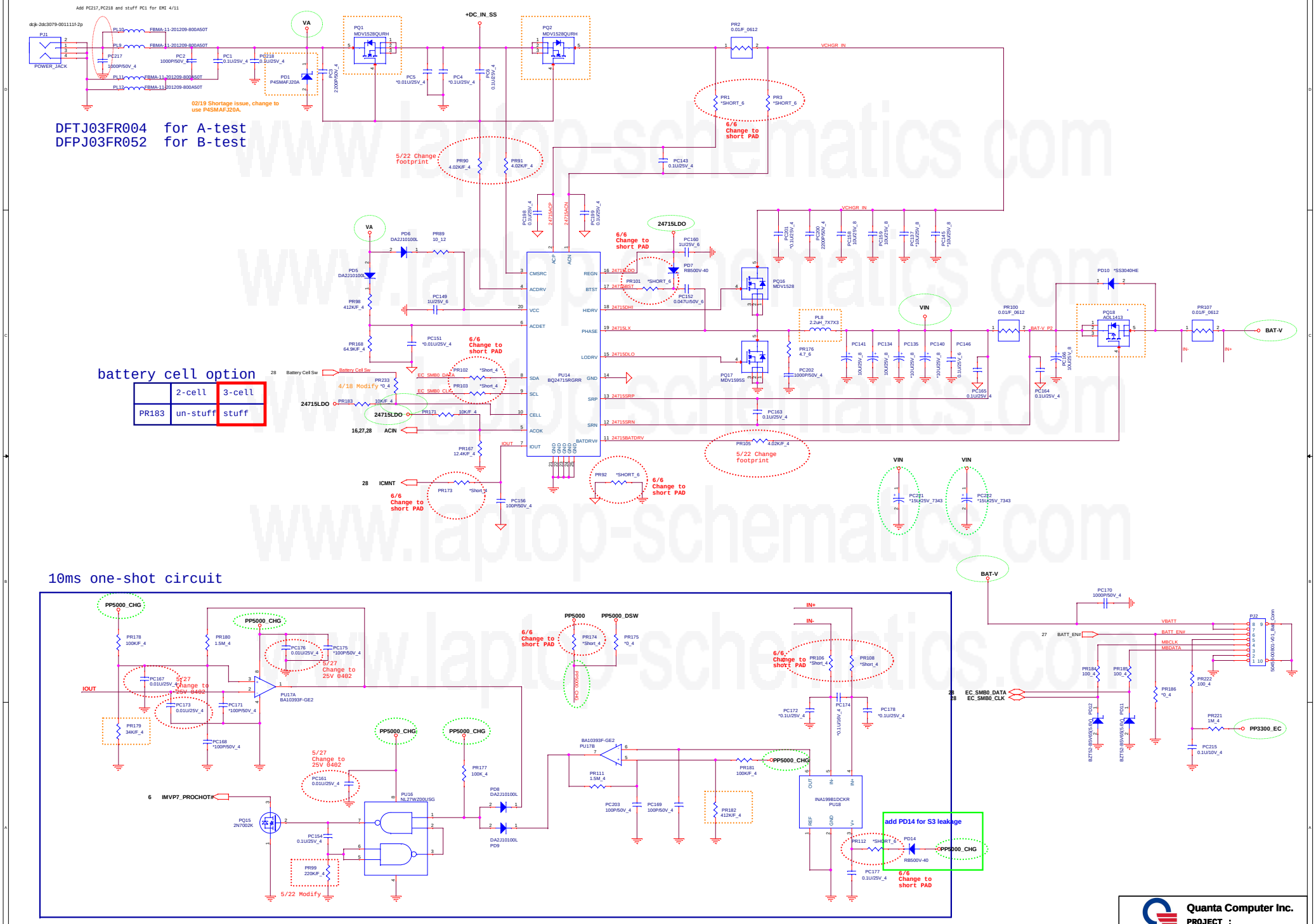

DFTJ03FR004 for A-test
DFPJ03FR052 for B-test

battery cell option

	2-cell	3-cell
PR183	un-stuff	stuff

10ms one-shot circuit

Quanta Computer Inc.
PROJECT :

Size	Document Number	Rev
	Charger(BQ24715)	1A

Date: Thursday, July 03, 2014 Sheet 29 of 42

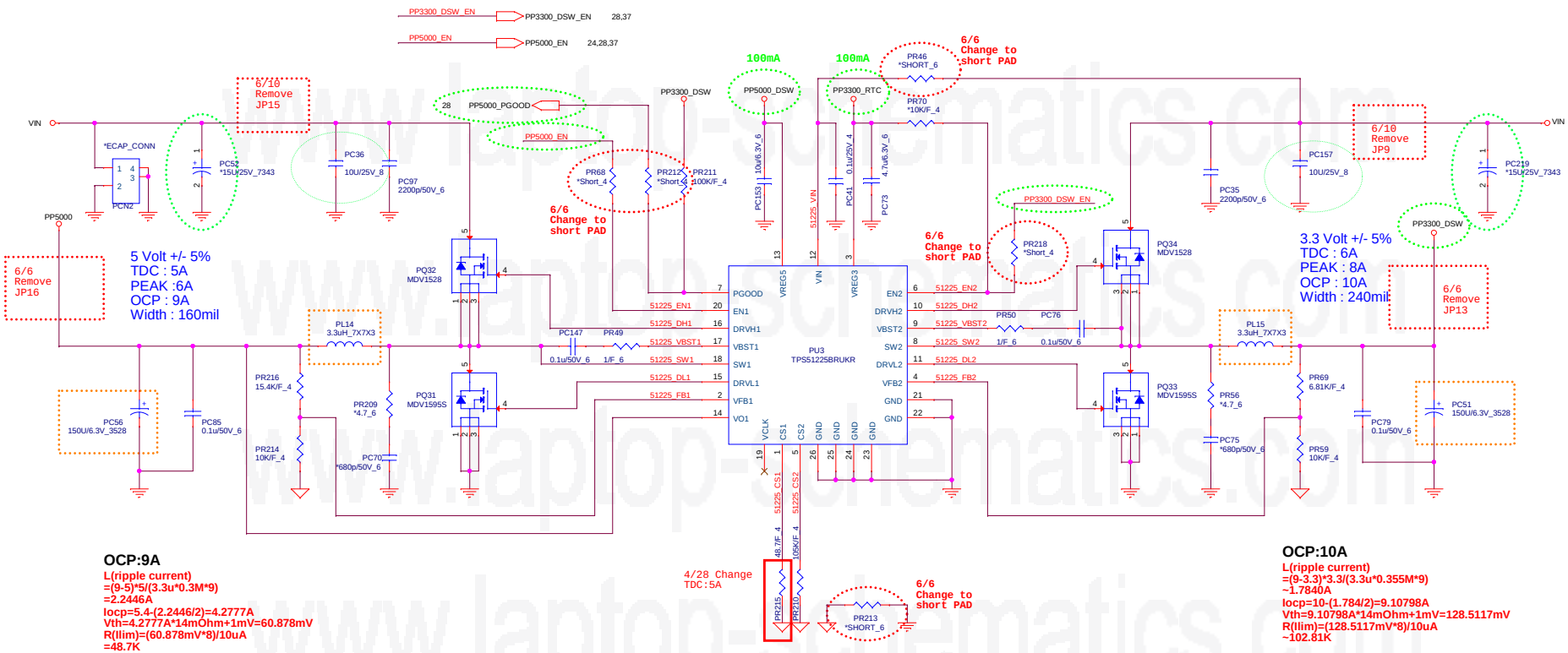

OCP:9A

L(ripple current)
=(9-5)*5/(3.3u*0.3M*9)
=2.2446A
Iocp=5.4-(2.2446/2)=4.2777A
Vth=4.2777A*14mOhm+1mV=60.878mV
R(Ilim)=(60.878mV*8)/10uA
=48.7K

OCP:10A

L(ripple current)
=(9-3.3)*3.3/(3.3u*0.355M*9)
~1.7840A
Iocp=10-(1.784/2)=9.10798A
Vth=9.10798A*14mOhm+1mV=128.5117mV
R(Ilim)=(128.5117mV*8)/10uA
~102.81K

6/10 Ramp Renove PU22,PU11

Quanta Computer Inc.		
PROJECT :		
Size	Document Number: SYSTEM 5V/3V (TPS51225BRUKR)	Rev 1A
Date: Thursday, July 03, 2014	Sheet 30 of 42	

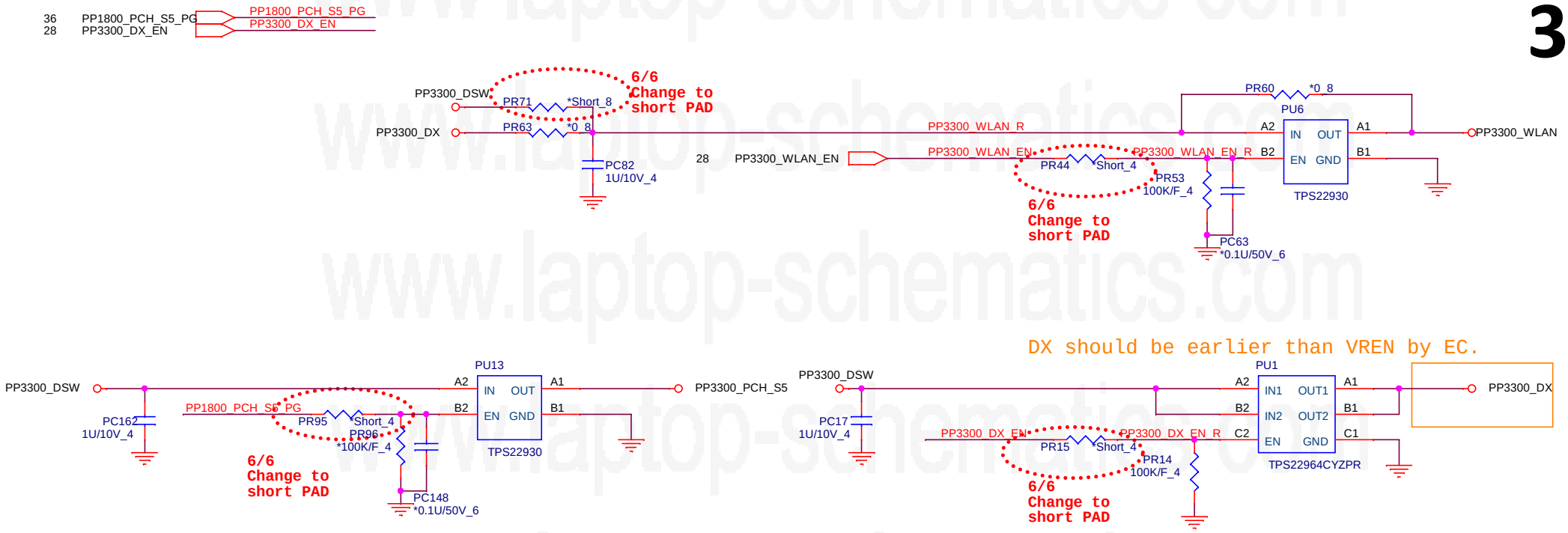

Quanta Computer Inc.

PROJECT :

Size	Document Number	Rev
	Load Switch	1A

Date: Thursday, July 03, 2014 Sheet 31 of 42

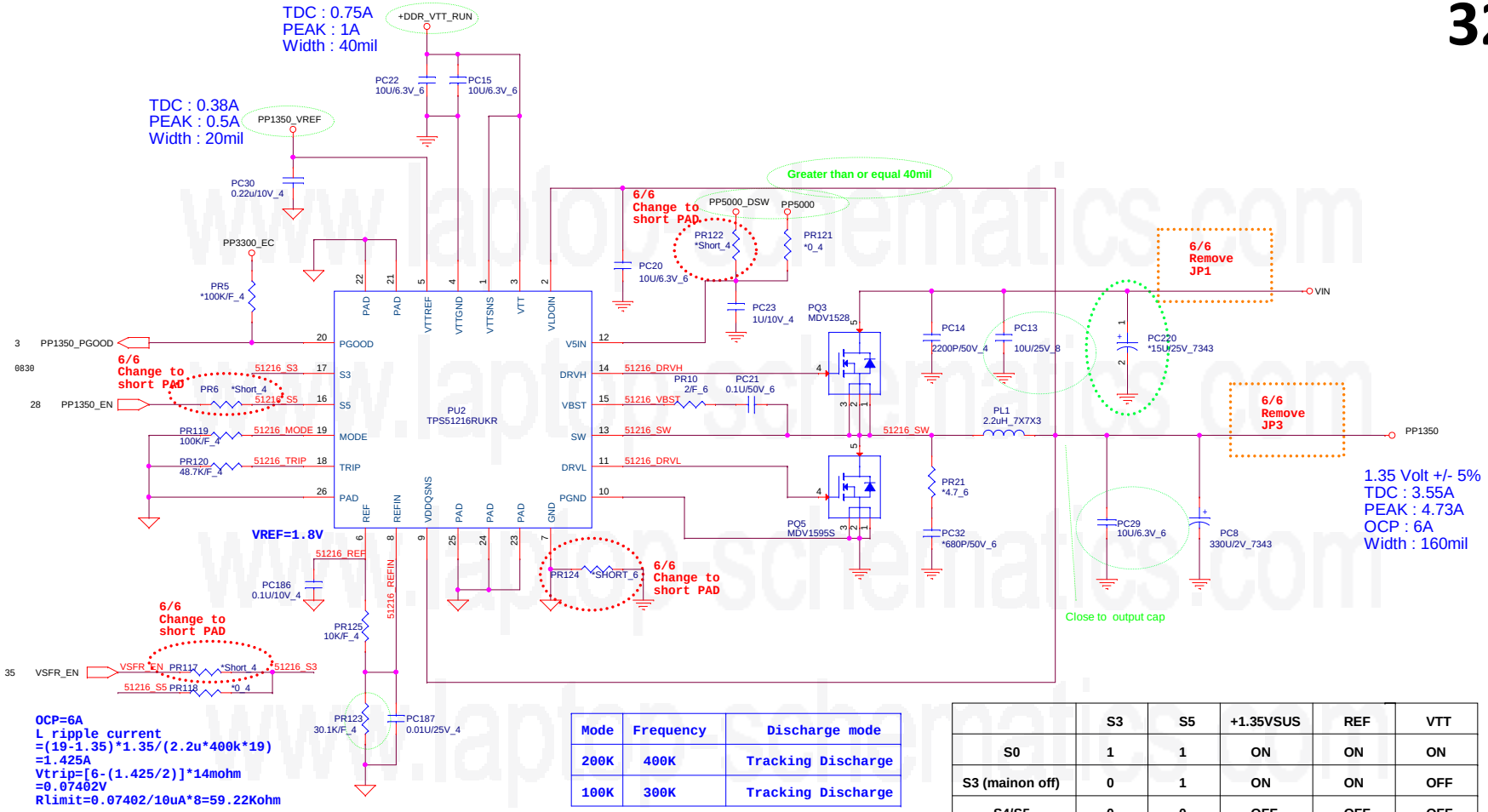

OCP=6A
L ripple current
=(19-1.35)*1.35/(2.2u*400k*19)
=1.425A
Vtrip=[6-(1.425/2)]*14mohm
=0.07402V
Rlimit=0.07402/10uA*8=59.22Kohm

Mode	Frequency	Discharge mode
200K	400K	Tracking Discharge
100K	300K	Tracking Discharge

	S3	S5	+1.35VSUS	REF	VTT
S0	1	1	ON	ON	ON
S3 (mainon off)	0	1	ON	ON	OFF
S4/S5	0	0	OFF	OFF	OFF

6/10 Ramp Renove PU20

Quanta Computer Inc.
PROJECT :

Size	Document Number	Rev
	DDR 1.35V(TPS51216)	1A

Date: Thursday, July 03, 2014 Sheet 32 of 42

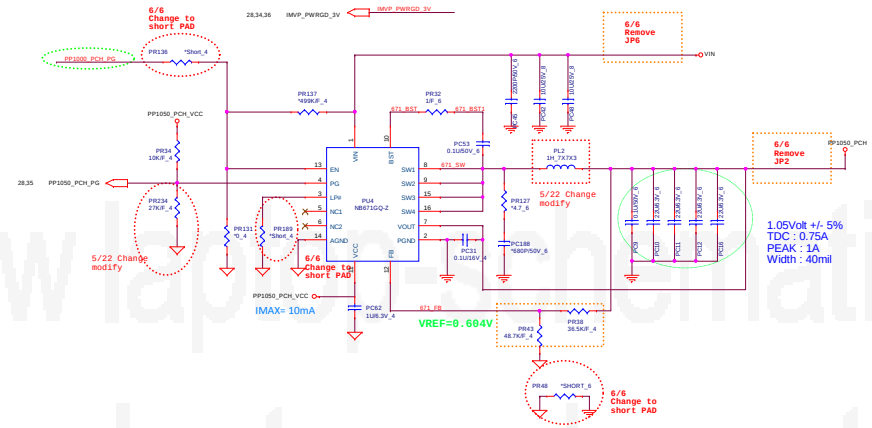

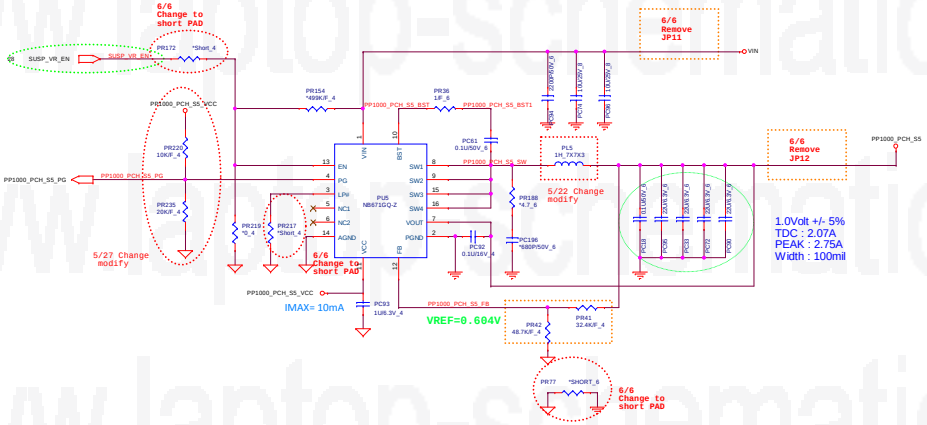

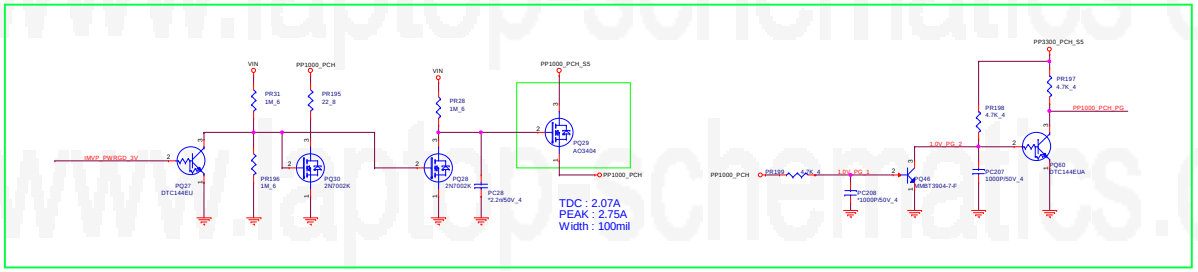

6/10 Ramp Renove PU21,PU23

Quanta Computer Inc.
PROJECT :
Size | Document Number | Rev
+1.05V/+1V(NB671LGQ-Z) | 1A
Date: Thursday, June 03, 2014 | Sheet 33 of 42

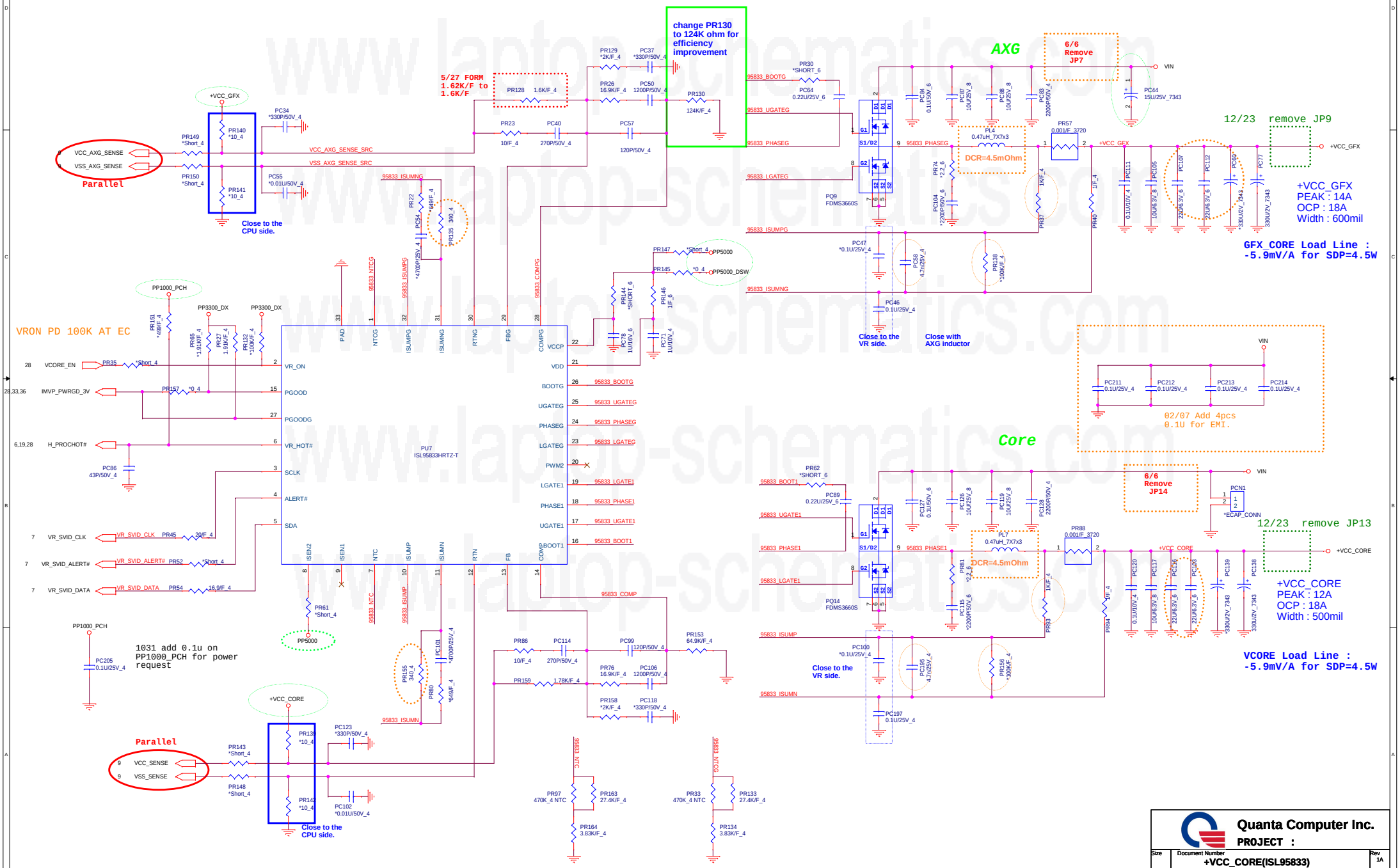

Quanta Computer Inc.

PROJECT :

Size	Document Number	Rev
	+VCC_CORE(ISL95833)	1A

Date: Thursday, July 03, 2014 Sheet 34 of 42

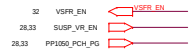

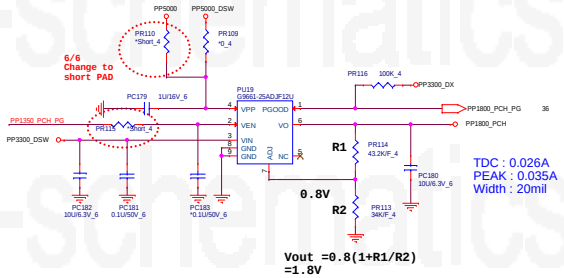

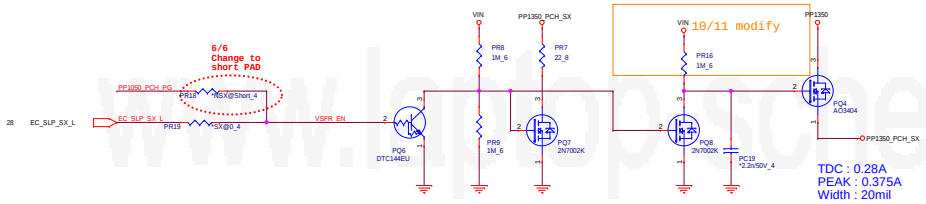

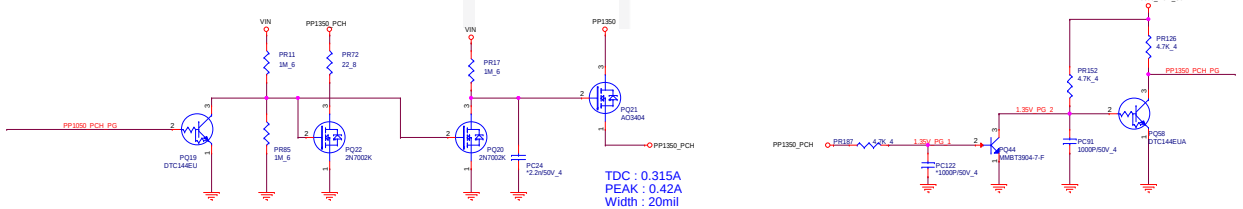

Quanta Computer Inc.		
PROJECT :		
Size	Document Number: LDO (1V/1.35V/1.5V/1.8V)	Rev 1A
Date: Thursday, July 03, 2014	Sheet 35 of 42	

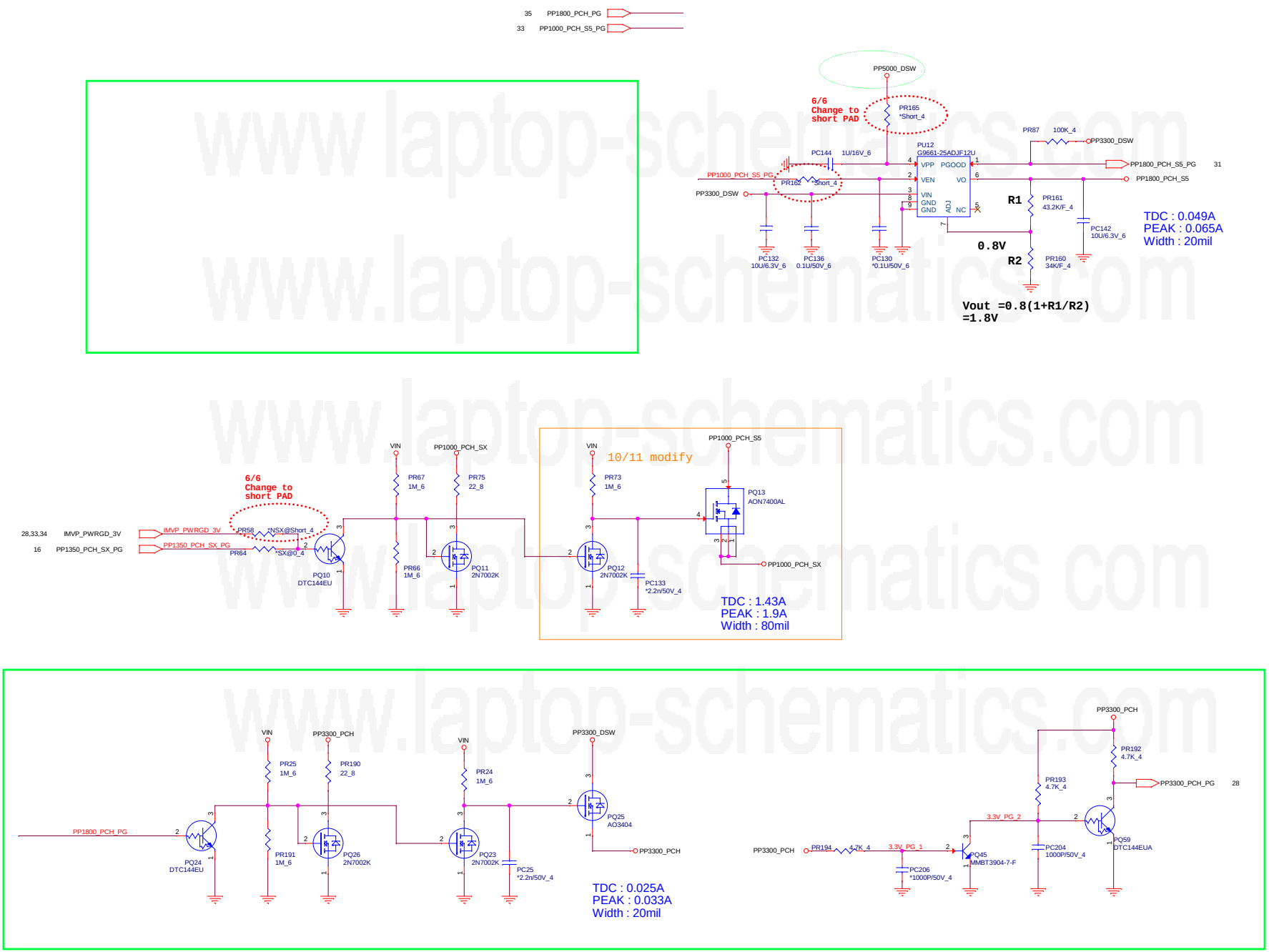

Quanta Computer Inc.

PROJECT :

Size	Document Number	Rev
	LDO(1.2V/3.3V/1.8V)	1A

Date: Thursday, July 03, 2014 Sheet 36 of 42

Thermal protect

12/23 add thermal protect
01/28 Customer confirm

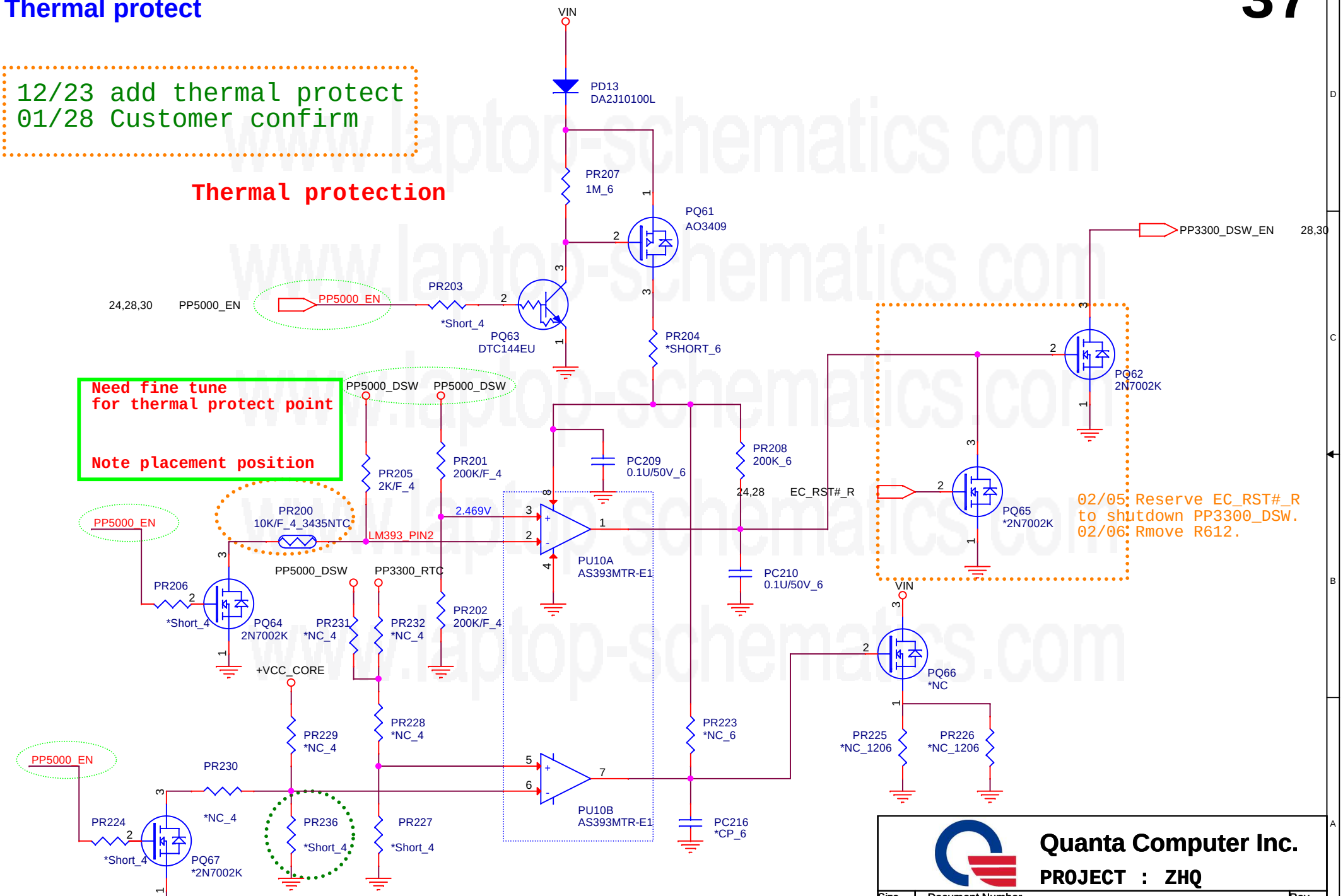

For EC control thermal protection (output 3.3V)

Quanta Computer Inc.

PROJECT : ZHQ

Size	Document Number	Rev
	Thermal protect	1A

Date: Thursday, July 03, 2014 Sheet 37 of 42

Support S0iX

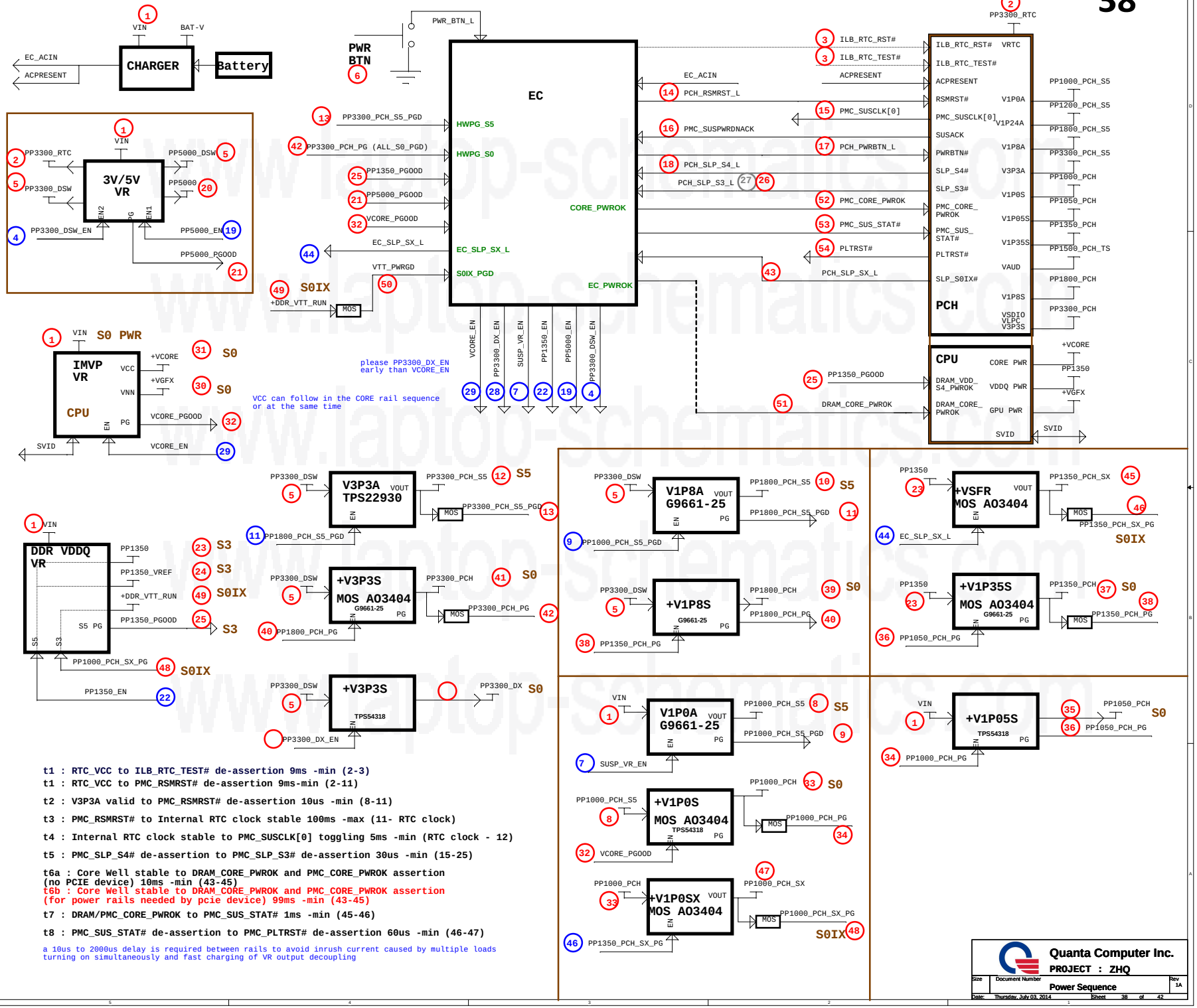

t1 : RTC_VCC to ILB_RTC_TEST# de-assertion 9ms -min (2-3)
t1 : RTC_VCC to PMC_RSMRST# de-assertion 9ms-min (2-11)

t2 : V3P3A valid to PMC_RSMRST# de-assertion 10us -min (8-11)

t3 : PMC_RSMRST# to Internal RTC clock stable 100ms -max (11- RTC clock)

t4 : Internal RTC clock stable to PMC_SUSCLK[0] toggling 5ms -min (RTC clock - 12)

t5 : PMC_SLP_S4# de-assertion to PMC_SLP_S3# de-assertion 30us -min (15-25)

t6a : Core Well stable to DRAM_CORE_PWROK and PMC_CORE_PWROK assertion (no PCIE device) 10ms -min (43-45)
t6b : Core Well stable to DRAM_CORE_PWROK and PMC_CORE_PWROK assertion (for power rails needed by pcie device) 99ms -min (43-45)

t7 : DRAM/PMC_CORE_PWROK to PMC_SUS_STAT# 1ms -min (45-46)

t8 : PMC_SUS_STAT# de-assertion to PMC_PLTRST# de-assertion 60us -min (46-47)

a 10us to 2000us delay is required between rails to avoid inrush current caused by multiple loads turning on simultaneously and fast charging of VR output decoupling

Quanta Computer Inc.
PROJECT : ZHQ
Size | Document Number | Rev 1A
Power Sequence
Date: Thursday, July 03, 2014 | Sheet 38 of 42

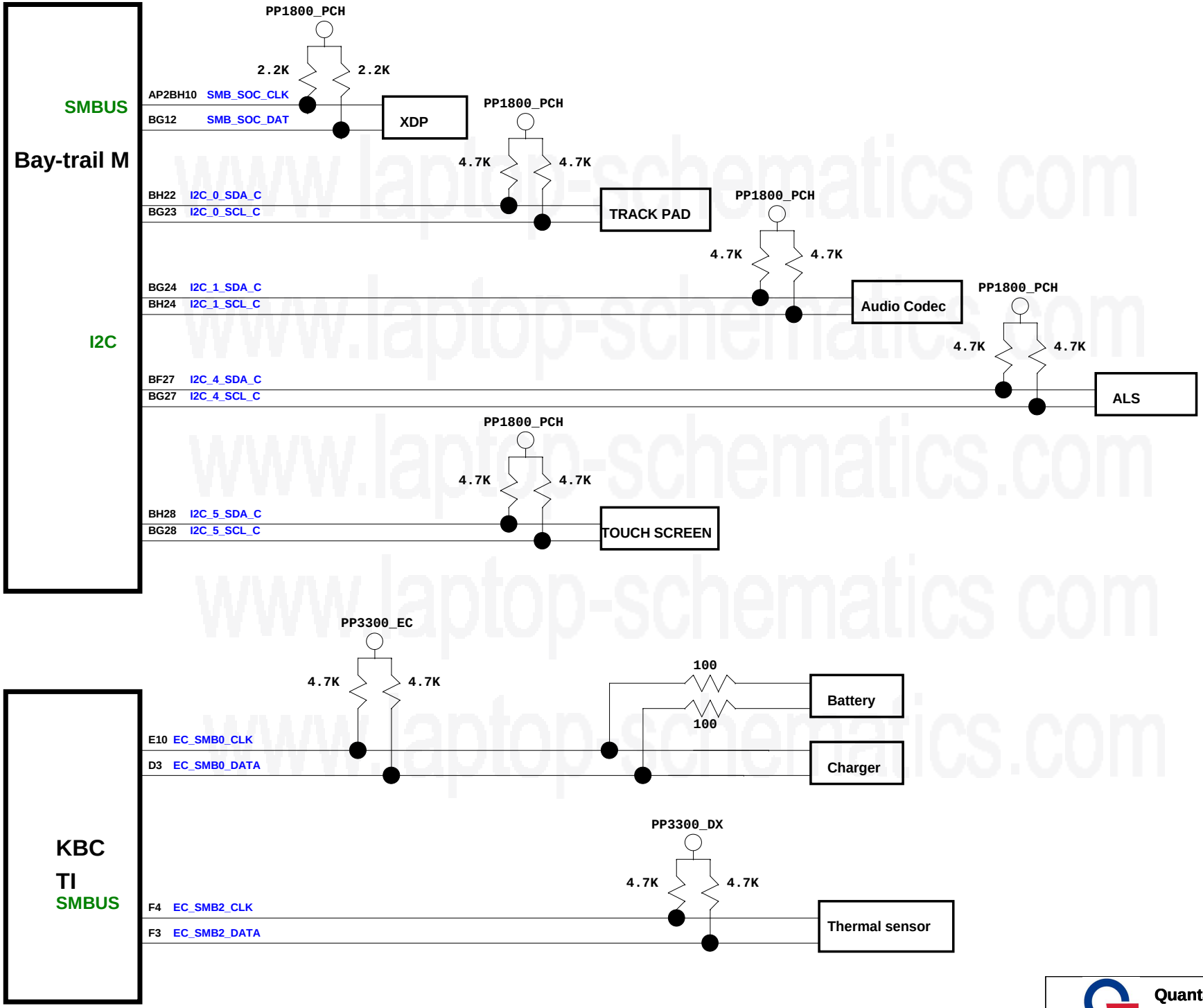

Quanta Computer Inc.
PROJECT : ZHQ

Size	Document Number	Rev
	SMBUS_I2C	1A

Date: Thursday, July 03, 2014 Sheet 39 of 42

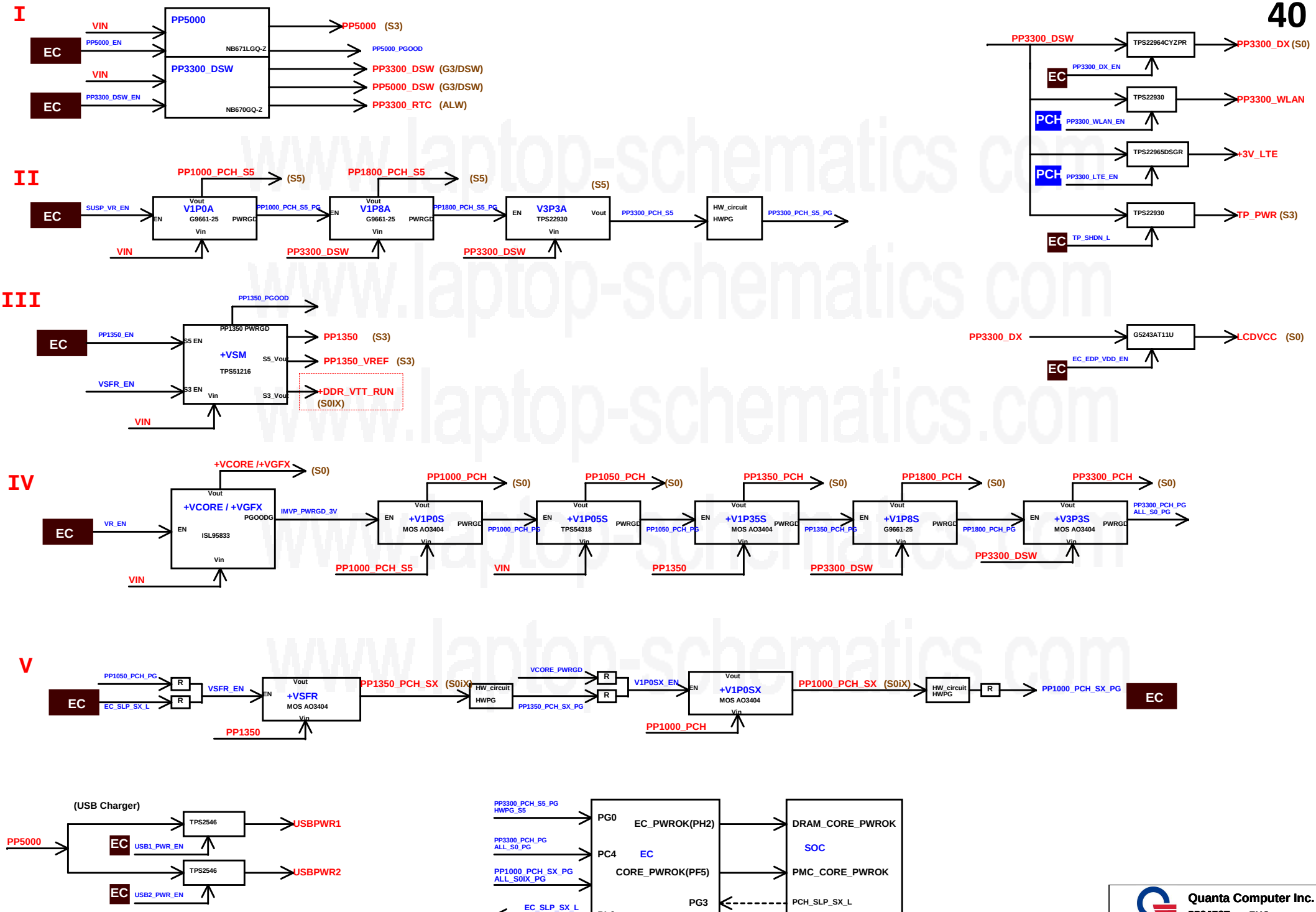

Quanta Computer Inc.
PROJECT : ZHQ

Size	Document Number	Rev
	BTM PWR CONTROL	1A

Date: Thursday, July 03, 2014 Sheet 40 of 42

Model	Version	CHANGE LIST
	1A	12/23 1.(page37) add thermal protect 2.(page34) remove JP9,JP13 12/24 1.(page27) change keyboard pin define. 2.(page3) change C102 from 0.1u to 1u 3.(page27) change keyboard connector from 30pin to 24pin 12/25 1.(page27) change CN10 from 6pin to 8pin and TP pin define 2.(page37) change PU26B to PU10B 3.(page29) change charger solution from bq24715 to bq24717 4. change PL1~PL8 from 7X7X1.8 choke to 7X7X3 12/26 1.(page 7,22) change R590 to R150 and R150 to R590 2.(page27) add TP111 and TP112 reserve for TP PS2 3.(page24) remove PP3300_PCH_S5 and PP3300_DX on CN7 12/27 1.(page17) change R168 to DNP 2.(page26) change bettery cut off switch SW1 from DHPATE2CK03 to DHP0BTEPV00 3.(page26) change USB3.0 connector CN4 from DFFC30FR120 to DFHS09FR234 4.(page27) change TP connector CN10 from DFFC06FR050 to DFFC08FR026 12/31 1.(PAGE25) CHANGE DMIC POWER FROM PP1800_PCH TO PP3300_PCH 1/2 1.(page26) add ESD U35 and U36 for USB3.0 1/3 1.(page20) change HDMI connector from DFHD19MR343 to DFHS19FR106 1/28 1.(page37) Confirm use Thermal protect. 2.(page26) Change to use USB power switch G547F1P81U. Reserve TI ESD solution and remove VARISTOR ESD. 3.(page26) Swap U36 and L4 D+/D- for routing. 4.(page28) Remove KBC USB_ILIM_SEL(Pin B5) & Charger Status(Pin A7) and page24 USB 2.0_ILIM_SEL. 5.(page24) Remove FFC USB power charger pin. 6.(page26) Remove screw shutdown scenario. 7.(page27) Add BI shutdown function. 2/05 1.(page27) Change keyboard ESD pin define for routing. 2.(page21) Per Customer's requirement, Remove GPIO & reserve TP and add TP on WIFI SDIO. 3.(page22) Per Customer's requirement, add TP on LTE BodySAR, LED, Config_1 and GPS disable. 4.(page22) Per Customer's requirement, add TP on LTE Pin 40, 42, 44, 47. 5.(page22) Reserve GPIO from EC to control LTE POWER ON/OFF. 6.(page22) Change C23 to 0.1u. 7.(page37) Reserve EC_RST#_R to thermal shutdown PP3300_DSW. 8.(page24) Reserve PP5000_EN to provide PP3300_THM from PP3300_RTC. 9.(page24) Remove PP3300_DSW & PP3300_PCH_S5 & PP3300_DX because DB won't use it. 2/06 1.(page24) Remove R376. 2.(page37) Remove R612. 3.(page22) Stuff R25 & R26 & R75. Reserve 33p on UIM_VPP for EMI. 4.(page18) Reserve TP for AUO panel pin 14(LCD Panel Self Test Enable). 2/07 1.(page10) Add 7pcs 0.1U for EMI. Location: C392~C398 2.(page24) Add 6pcs 0.1U for EMI. Location: C399~C404 3.(page27) Swap TP pin definition. 4.(page34) Add 4pcs 0.1U for EMI. Location: PC211~PC214 2/11 1.(page all) Modify function code to EMC for ESD/EMI. 2.(page all) Correct all items QPN & Q description. 3.(page all) Correct Power items QPN that include PU17 & PQ13 & PL1~PL8 . 4.(page 26) Change USB power switch (U37) from G547F1P81U to G524C1T11U. 2/13 1.(page 26) Update USB3.0 connector & Hole footprint. 2.(page 28) Swap pin definition for routing smoothly. 2/14 1.(page 24) Change Q52 & Q56 MMBT3904 to SOT23 package. 2.(page 08) Change RMID to 001. 2/19 1.(page 29) Shortage issue, change to use P4SMAFJ20A.
	2A	2/27 1.(page 17) Change SD card to half card socket for ME request. 2.(page 34) Core/GFX efficiency improvement. PL4 and PL7 change from 0.24uH to 0.47uH. PR30 and PR62 change from 2.2ohm to 0ohm. PR130 change from 21Kohm to 124Kohm. 3.(page 7 & page 15 & page 28) S3 leakage on PP1800_PCH. Change SIO_SPI_CS#, SIO_SPI_MISO, SIO_SPI_MOSI, SIO_SPI_CLK to TP on page 7, cancel level shift on page 15 and change SIO_SPI_MOSI_EC, SIO_SPI_MISO_EC, SIO_SPI_CLK_EC and SIO_SPI_CS_L to TP on page 28. 4.(page 29) Cancel PR112 and Add one diode RB500V-4 for S3 leakage on PP5000 issue. 5.(page 29) Un-stuff PR183 for 3-cell battery. 6.(page 8) Reserve RAM_ID3 for memory BOM option. 7.(page 27) SLG Reset IC needs to change new version, wait for confirm. 8.(page 23) Stuff C246 for RF.
	2B	3/19 1.(page 15) unstuff U20/R391/R592/R156 2.(page 17) Change SD card to full card socket for ME request. 3.(page 24) change CN7 pin defined ,Add 2nd headphone and add USB powrer/gnd pin 4.(page 25) Add 2nd headphone for Education 5.(page 26) change USB Power SW U37 from G524C1T11U to G524A1T11U 6.(page 29~37) update power circuit 3/20 1.(page 28) Add PWR_LED1 pin on U16 G3 pin 2.(page 28) Add LTE_PWR_ON_R pin on U16 E11 pin for LTE power on 3.(page 28) Add Battery cell select pin on U16 N1 pin for 3S/4S select 3/25 1.(page 18) CHANGE POWER FROM PP1800_PCH TO PP3300_PCH and add R619/R620 2.(page 10) C284, C287, C305 ,C313, C296, C339, C340, C314, C306 *9pcs change from CH5101K9B01(1u) to CH6101M9B02(10u) 3.(page 10) C297, C260, C263, C268, C247, C248, C253, C259, C262, C254, C258, C255, C256, C295, C329, C261, C264, C267 *18pcs change from CH5101K9B01(1u) to CH5471M9B00(4.7u) 4.(page 29~37) update power circuit 3/31 1.(page 8) CHANGE DRAM ID table 2.(page 23) CHANGE LED to BL/ORG 4/02 1.(page 25) Remove DMIC onboard circuit 2.(page 18) Add DMIC pin at LVDS connector 4/03 1.(page 25) Remove 2nd headphone for Education 4/11 1.(page 29) Add PC217,PC218 and stuff PC1 for EMI 2.(page 26) nusutff R93,R87 and stuff L4 for EMI 3.(page 17) Add C405 and C406 for SDIO 3G card 4/11 4/18 1.(page 22) CN5 cahgne footprint from NGFF-80149-2121-75P-KB-SMT to NGFF-80149-2121-75P-KB 2.(page 29) Add PR233 for Battery Cell Sw 3.(page 27) Change U24 from AL022930U00 to AL022902T00 for cost down 4/21 1.(page 17) C98/C97 change to 22p for crystal report 4/23 1.(page All) Correct BOM 2.(page 27) Change R546 location and add Q44/Q65 on Track Pad INT# for leakage issue follow 0C9 3.(page 18) Add C407 on Touch Reset line for power sequence tuning of TS module, spec is 90 ns from VDD to RST 4.(page 34) change PC87,PC88,PC119,PC126 to 10uF follow 0C9

DOC NO.	PROJECT MODEL :	Chrome	APPROVED BY:		DATE:		Quanta Computer Inc. PROJECT : Z9Q
	PART NUMBER:		DRAWING BY:		REVISION:		Size: Document Number: Change list 1 Rev: 1A Date: Sheet of

Model	Version	CHANGE LIST
	2B	4/23 6.(page 31) Change PC29/PC13 to 10uf follow 0C9 7.(page 31) PC224 change to 0.1u 8.(page 27) Change R144 from 4.7K to 1M and add a cap C352 2.2uF for Battery shipping mode by SLG4350, U17 change to SLG4K4350 9.(page 26) Change C78 to 220uF and Add D29 10.(page 7) add C408 on CORE_PWROK for ESD improvement 11.(page 6) add C409 on PROCHOT# for ESD improvement 12.(page 3) C102 to be changed to 0.1uF on DRAM_PWROK for ESD improvement 4/24 1.(page 8) reserve R483 for CLKRUN# disable follow 0C9 2.(page 27) stuff U30,U31,U32,U33,U34 for ESD 3.(page 30) change PC36 to 10uF
	3C	5/13 1.(page 16) Modify level shift circuit for TPS and BOM changed 5/20 1.(page 26) change ESD-PROTECTION and remove U35/U36 circuit 2.(page 24) Change DB pin defined and add a audio GND for audio issue 5/22 1.(page 25) Add R625 for Audio issue 2.(page 24) Change CN7 pin 29 connect to ANGD for audio issue 3.(page 29) update power schematic 4.(page 33) update power schematic for power sequrence 5/23 1.(page 33) Change PR234 from 20K to 27K and Correct PR235 AGND 2.(page All) Correct BOM 5/26 1.(page 29) Change PJ2 connector from DFHD08MS125 to DFHD08MR201 2.(page 8) Add R625 and R626 for TPS issue 5/29 1.(page 23) Exchange LED1 and LED2 for icon issue 2.(page 23) change R589,R599,R246,R245 for LED light
	3D	6/3 1.(page 26) L4 change P/N from CX900HL2000 to CX900HL2002 2.(page 34) unstuff PC60 and PC139 for cost down 6/6 1.(page 28) change EC P/N to AR0ZHQS1001 for T11 issue 2.(page 3) change R178/R191 to 0402 shortpad for cost down 3.(page 5) change R58/R184/R183/R452/R457/R180/R197 to 0402 shortpad for cost down 4.(page 6) change R103/R123/R131/R139/R204/R375/R379/R381/R383/R414/R455/R462 to 0402 shortpad for cost down 5.(page 7) change R81/R107/R133/R424/R448/R468/R470/R471/R479/R481/R513/R165 to 0402 shortpad and R116/R157 change to 0603 shortpad for cost down 6.(page 8) change R109/R449 to 0402 shortpad for cost down 7.(page 9) change R343/R385 to 0402 shortpad for cost down 8.(page 10) change R54/R110/R114/R121/R378/R380/R395/R400/R407/R430/R453/R456/R460/R464 to 0402 shortpad and R193/R555 change to 0603 shortpad,R354/R384 change to 0805 shortpad for cost down 9.(page 12) change R263/R307/R319/R320/R325/R332 to 0402 shortpad and R337 change to 0603 shotpad for cost down 10.(page 15) change R445 to 0402 shortpad for cost down 11.(page 17) change R489/R507/R526/R541/R549/R550/R552 to 0402 shortpad and R335 change to 0603 shortpad for cost down 12.(page 18) change R20/R326/R339/R341/R620 to 0402 shortpad and R14/R224 change to 0603 shortpad,R17 change to 0805 shortpad for cost down 13.(page 19) change R216/R222/R499/R505/R524/R535/R538/R540/R564/R565 to 0402 shortpad for cost down 14.(page 20) change R72/R73/R74 to 0402 shortpad for cost down 15.(page 21) change R44/R46/R55 to 0402 shortpad andd R39 change to 0805 shortpad for cost down 16.(page 22) change R75/R411 to 0402 shortpad and R355/R602 change to 0603 shortpad, R601 change to 0805 shortpad for cost down 17.(page 23) change R56/R353 to 0402 shortpad for cost down 18.(page 24) change R370/R377/R194 to 0402 shortpad for cost down 19.(page 25) change R219/R223/R605/R606/R228 to 0402 shortpad and change R217/R229/R232/R233/R241 to 0603 shortpad for cost down 20.(page 27) change R213/R498 to 0402 shortpad and change L7 to 0603 shortpad for cost down 21.(page 28) change R145/R162/R164/R169/R173/R444 to 0402 shortpad for cost down 6/9 1.(page 12) unstuff U10 anc C16 for cost down 2.(page 29-36) 1.Removed : JP2,JP3,JP7,JP12JP13,JP14,JP16,JP15,JP9,JP1,JP11,JP6 2.Change to shortpad_4: PR58,PR162,PR165,PR18,PR115,PR118,PR140,PR150,PR147,PR52, PR35,PR143,PR148,PR136,PR189,PR172,PR217,PR6,PR122,PR117,PR95, PR44,PR15,PR68,PR212,PR102,PR103,PR173,PR174,PR186,PR188. 3.Change to shortpad_6: PR144,PR30,PR62,PR48,PR77,PR124,PR46,PR213,PR1,PR3,PR101,PR92,PR112. 4.Change to shortpad_8: PR71 5.Remove CURRENT/POWER MONITOR circuit : PU22,PU11,PU20,PU21,PC191,PC192,PC113,PC131,PC184,PC185,PC189,PC190,PC193,PC194. 6.Keep Vin 7343 Capacity: PC219,PC220,PC221,PC222 6/16 1.(page 37) PR236 and PR227 change to shortpad 2.(page 27) unstuff SW1/Q62/Q63/R609 for Acer request remove reset function. 6/17 1.(page 27) modify EC reset circuit and Add D1002 and D1003 for ESD issue.
		6/23 1.(page 27) change U24 P/N fromAL022902T00 to AL022930U00 for SMT issue 2.(page 27) SW1/C390/R627/R628 unstuff for removed RST buttom 3.(page 18) Remove L1 for SMT request and R8,R9 change to shortpad_4 for cost down. 4.(page 20) Remove L2 for SMT request , R41,R39,R22 change to shortpad_4 for cost down. 5.(page 22) Remove L15 for SMT request. 5.(page 26) Remove L3,L5,R93,R87 for SMT request. 6.(page 34) PR61 change to shortpad_4 for cost down. 7/2 1.(page 37) change PR205 from 1.5K to 2K for throme request

DOC NO.	PROJECT MODEL :	Chrome	APPROVED BY:		DATE:	
	PART NUMBER:		DRAWING BY:		REVISON:	

Quanta Computer Inc.
PROJECT : Z9Q
Size: Document Number: Rev: Change list 2
Date: Sheet of

Model	REV
ZHQ	1A

CHANGE LIST

2013/12/23 1. Release first version for ZHQ.
2. (Page 1)Update CN4 QPN , Footprint and Part Description
3. (Page 1)Remove LED1 and R1,R9 and R2
4. (Page 1) Remove NetName PWR LED0 and PWR LED1
5. (Page 1,2,3) Update Function code
6. (Page 1) Remove R6 ,R7 and AGND

2014/01/27 1. Change the page number
Page 1 -> Page 3 , Page 2 -> Page 4 , Page 3 -> Page 5 , Page 4 -> Page 1
2. (Page 2)Add block diagram

2014/01/28 1. (Page 3)Remove CN4 ,Pin23, 24, 26 , Add one TP
2. (Page 4)Change USB charger to USB Switch
3. (Page 2)Change Block diagram

2014/02/03 1. (Page 3)Change CN4 Pin5 pin definition

2014/02/05 1. (Page 3)Remove CN4 Pin10,11,15

2014/02/07 1. (Page 4,5)Change USB2.0/Audio jack connector Part number

2014/02/10 1. (Page 3)Change CN4 input current form 1.5A to 2A
2. (Page 3)Base on DXF, remove the Hole7.
3. (Page 4)Change the C2 QPN.

2014/02/11 1. (Page 4)Change USB power switch (U1) from G547F1P81U to G524C1T11U. Change C3 value from 1U to 2.2U.

2014/02/12 1. (Page 3)Add 0.1u on PP5000 & PP3300_RTC for EMI.
2. (Page 3,4,5) Rename all location

2014/02/13 1. (Page 4)Change C1 from CH7101MT205 to CH7101MT202

2014/03/07 1. (Page 3) Change pin5 pin definiton from DET_TRIGGER_SW to HP_JD_L for Audio.

2014/03/24 1. (page 3) change CN1 pin defined , add USB power/gnd pin for ESD.
2. (page 4) change USB Power SW U2 from G524C1T11U to G524A1T11U for USB.

2014/04/03 1. (page 3) Remove CN3 Pin10 ,11 for Acer request

2014/04/10 1. (page 4) Remove R9,R10.And change L5 from CX1HN900000 to CX12B900000 for USB.
2014/04/14 1. (page 3) Change MR1 from AL008251000 to AL009132003 for Lid.
2014/04/23 1. (page 5) Add D7 , Stuff D1,D2,D3,D4 for ESD.
2014/05/05 1. (page 5) Separate it between AGND and DGND,Add R36,R37,R26,R38,R52,R53,C24,C23 for Audio
2014/05/07 1. (page 3) Separate it between AGND and DGND,Add R54 for Audio
2014/05/16 1. (page 5) Separate it between AGND and DGND,Nustuff R37,R26,R38,R52,R53,C24,C23 for Audio
2014/05/28 1. (page 5) Nustuff R36 for Audio

2014/06/23 1. (page 4) Remove R9,R10 for SMT request

MODEL	FROM	To
Page 02		1A
Page 03		1A
Page 04		1A
Page 05		1A

DOC NO.	PROJECT MODEL :	ZHQ	APPROVED BY:	J.C. Huang	DATE:	2014/04/23
	PART NUMBER:		DRAWING BY:	Dennis Lin	REVISON:	1B

Quanta Computer Inc.
PROJECT : ZHQ
Size | Document Number: Change History | Rev 1A
Date: Monday, June 23, 2014 | Sheet 1 of 5

VER : 1A	
BOM P/N	Description
*	ZHQ IO/B ASSY

Block Diagram
(Audio Headset Switch + Phone Jack + Hall Sensor + USB CONNECTOR)

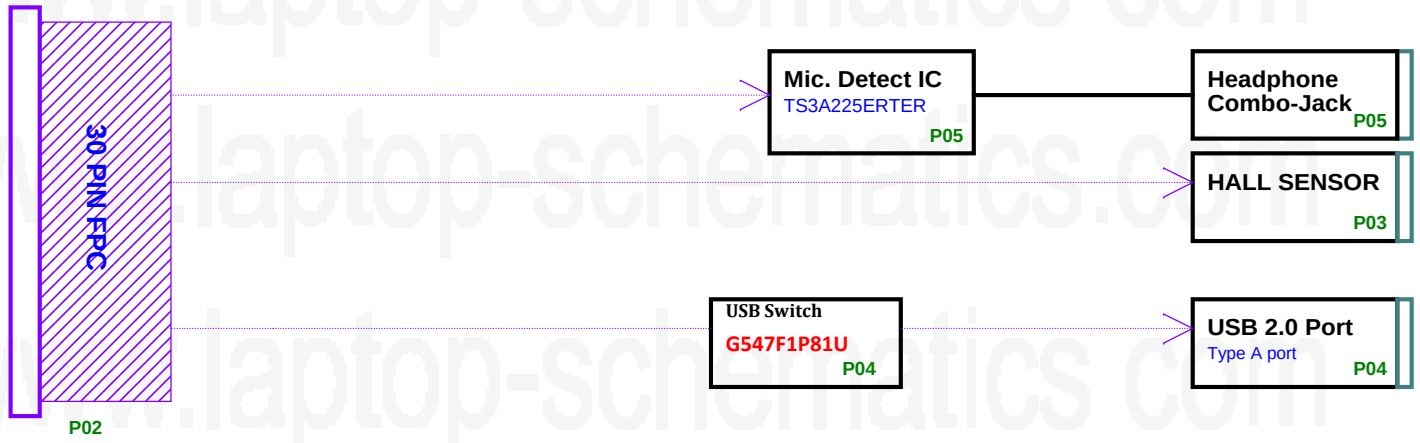

USB2.0: 500mA x1
Charger (DCP): 2A x1
Hall Sensor 3.3V x1

Schematic Marks

Reference	Description
*	do not stuff
/F	1% esistance

Quanta Computer Inc.

PROJECT : ZHQ_IO BOARD

Size	Document Number	Rev
	Block Diagram	1A

Date: Monday, June 23, 2014 Sheet 2 of 5

IO Board Connector

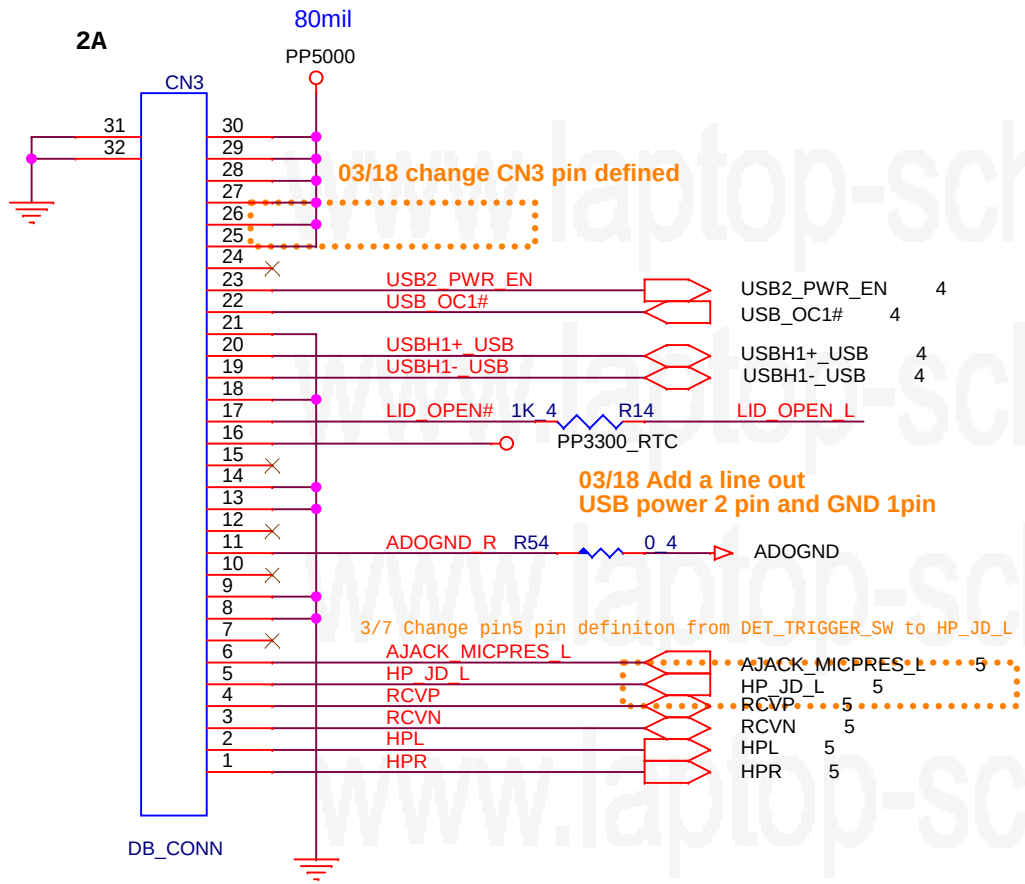

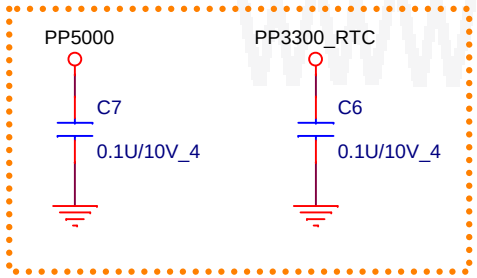

02/12 Add 0.1u on PP5000 & PP3300_RTC for EMI.

Lid Switch (HSR)

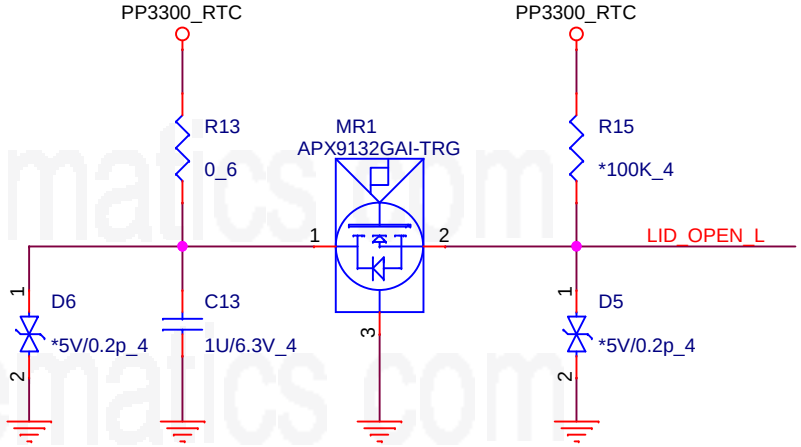

HOLE

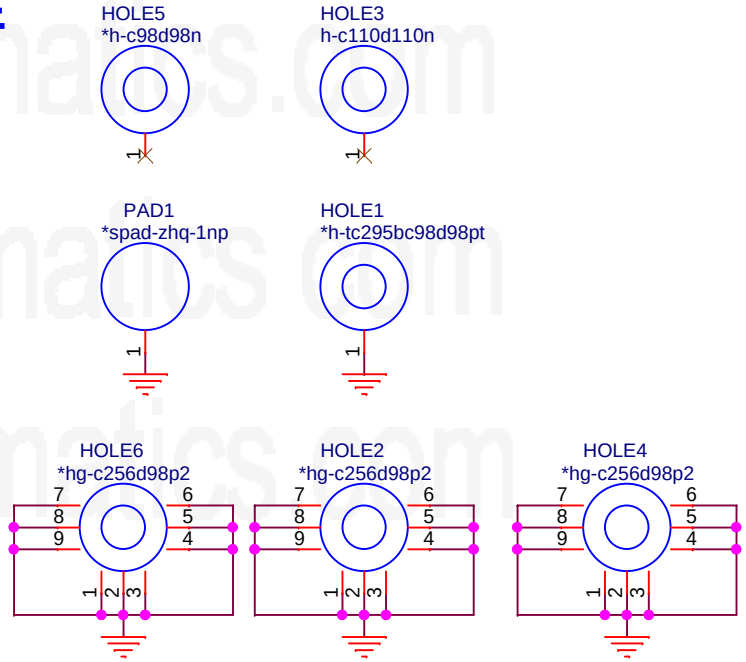

Quanta Computer Inc.

PROJECT : ZHQ

Size	Document Number	Rev
	FFC CONN /HSR / HOLE	1A
Date: Monday, June 23, 2014	Sheet 3 of 5	

USB Switch

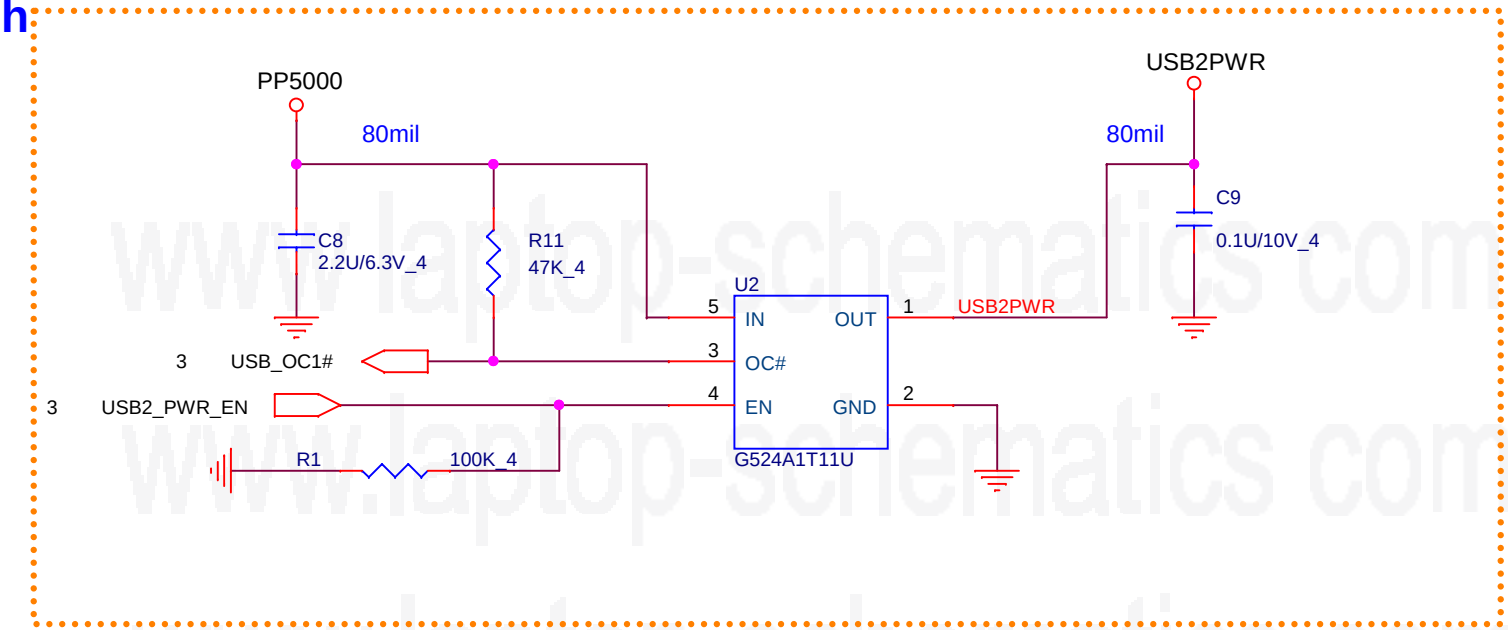

1/28 Change USB charger to USB switch
02/11 Change USB power switch (U1) from G547F1P81U to G524C1T11U.
Change C3 value from 1U to 2.2U.

USB 2.0

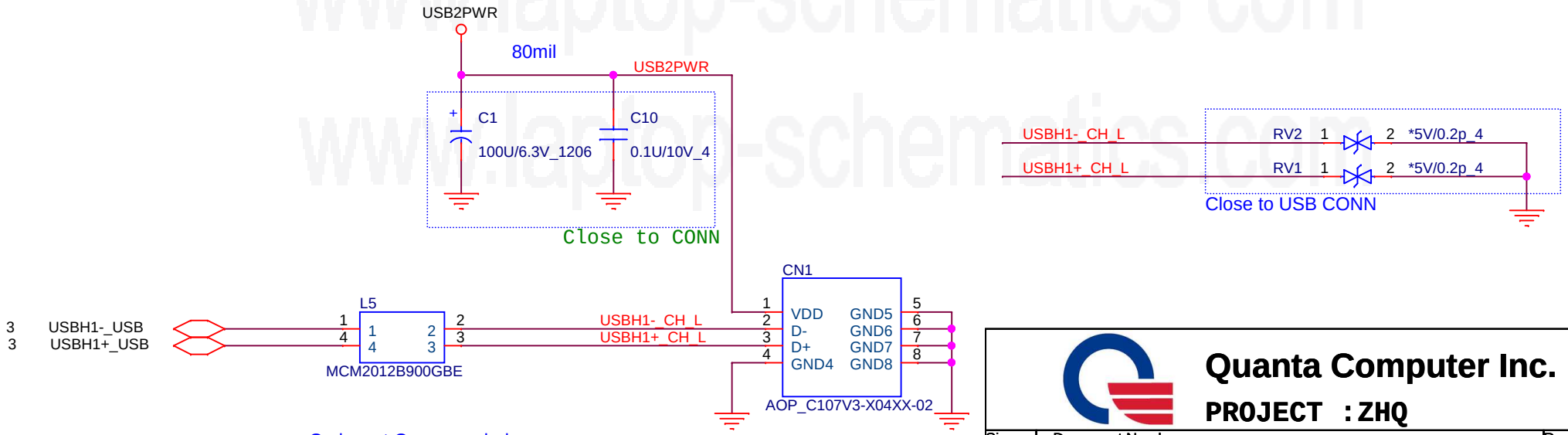

Co-layout Common choke
for A-test validation only.

Quanta Computer Inc.

PROJECT : ZHQ

Size	Document Number	Rev
	USB 2.0 / USB Switch	1A
Date: Monday, June 23, 2014	Sheet 4 of 5	

Audio Headset Switch (ADO)

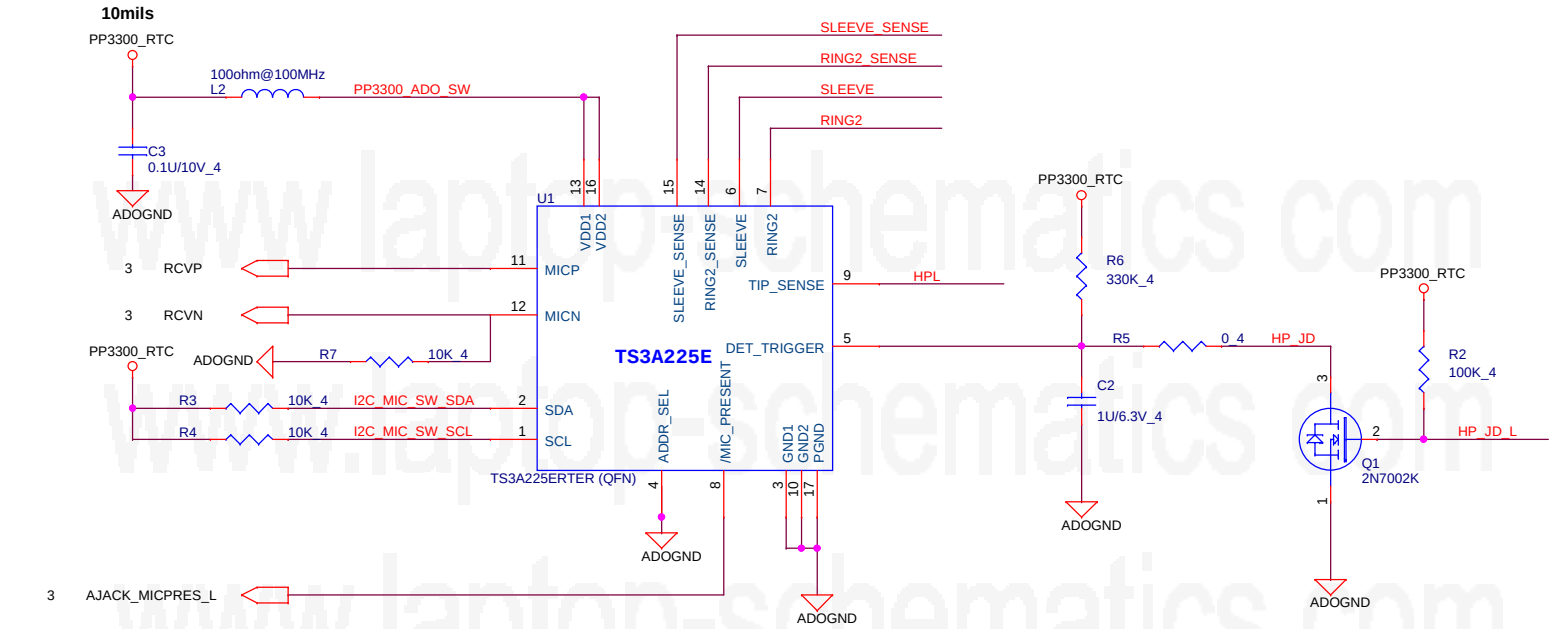

Combo Jack (ADO)

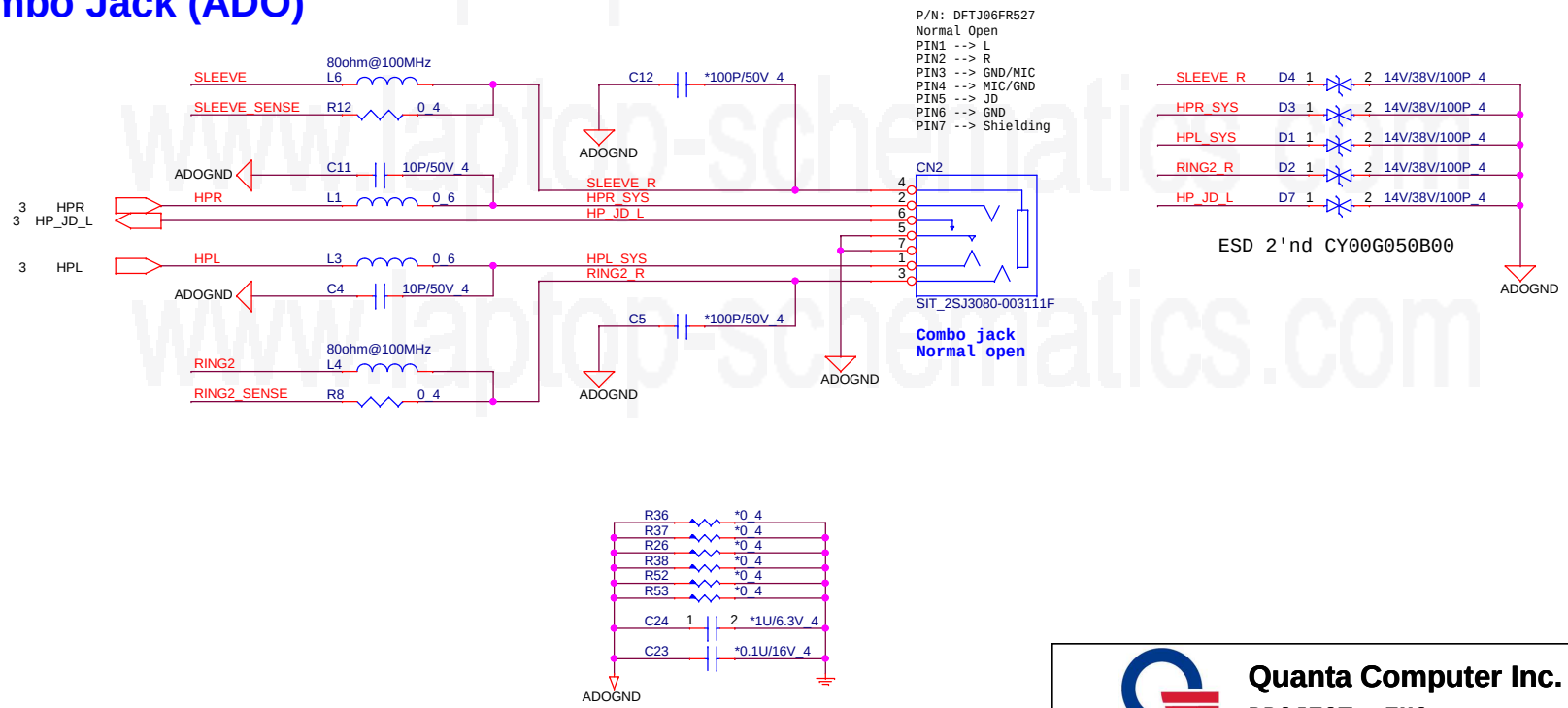

Quanta Computer Inc.		
PROJECT : ZHQ		
Size	Document Number: Audio Headset Switch/ Combo Jack	Rev 1A
Date: Monday, June 23, 2014	Sheet 5 of 5	